Interoperability Model Layer

19. IfcSharedBldgElements

The Schema IfcSharedBldgElements is defined at the Interoperability Layer and covers the definition of building elements that are shared among several IFC domain or application type models.

19.1. Type IfcCoveringTypeEnum

19.1.1. Type Semantic Definition

Definition from IAI: This enumeration defines the available Generic Types for IfcCovering.

History

This Enumeration has changed after IFC Release 1.5.1, please see the Migration Guide for details

19.1.2. PreDefined Type

This enumeration defines the available PreDefined Types for IfcCovering

19.1.3. Enumeration

Ceiling
Flooring
Cladding
CoveringMillwork
UserDefined
NotDefined

19.2. Type IfcDoorPanelTypeEnum

19.2.1. Type Semantic Definition

Definition from IAI: This enumeration defines the available Generic Types for IfcDoorPanel.

History

New Enumeration in IFC Release 2.0

19.2.2. PreDefined Type

This enumeration defines the available PreDefined Types for IfcDoorPanel

19.2.3. Enumeration

Swinging
Sliding

Copyright © International Alliance for Interoperability - 1996-1999

Revolving
Rollingup
UserDefined
NotDefined

19.3. Type IfcJointEnum

19.3.1. Type Semantic Definition

Definition from IAI: This enumeration defines the basic ways to describe the joining of elements.

History

New Enumeration in IFC Release 2.0

19.3.2. Enumeration

ExpansionJoint
EdgeJoint
ControlJoint
NotDefined

19.4. Type IfcPermeableCoveringTypeEnum

19.4.1. Type Semantic Definition

Definition from IAI: This enumeration defines the available Generic Types for IfcPermeableOpeningCover.

History

New Enumeration in IFC Release 2.0

19.4.2. PreDefined Type

This enumeration defines the available PreDefined Types for IfcPermeableCovering

19.4.3. Enumeration

Grill
Louver
Screen
UserDefined
NotDefined

19.5. Type IfcSlabTypeEnum

19.5.1. Type Semantic Definition

Definition from IAI: This enumeration defines the available Generic Types for IfcSlab.

Copyright © International Alliance for Interoperability - 1996-1999

19.5.2. PreDefined Type

This enumeration defines the available PreDefined Types for IfcSlab

19.5.3. Enumeration

Floor
Roof
UserDefined
NotDefined

19.6. Type IfcWindowPanelOperationEnum

19.6.1. Type Semantic Definition

Definition from IAI: This enumeration defines the basic ways to describe how window panels operate.

History

New Enumeration in IFC Release 2.0

19.6.2. Enumeration

SideHungRightHand
SideHungLeftHand
TiltAndTurnRightHand
TiltAndTurnLeftHand
TopHung
BottomHung
PivotHorizontal
PivotVertical
SlidingHorizontal
SlidingVertical
RemovableCasement
FixedCasement
OtherOperation
NotDefined

19.7. Type IfcWindowPanelTypeEnum

19.7.1. Type Semantic Definition

Definition from IAI: This enumeration defines the available Generic Types for IfcWindowPanel.

History

New Enumeration in IFC Release 2.0

Copyright © International Alliance for Interoperability - 1996-1999

19.7.2. PreDefined Type

This enumeration defines the available PreDefined Types for IfcWindowPanel

19.7.3. Enumeration

FixedPanel
Sliding
Swinging
Pivoting
UserDefined
NotDefined

19.8. Class IfcBeam

19.8.1. Class Semantic Definition

Definition from IAI:: IfcBeam is defined in the Architecture Domain and possibly reused by other domains. It represents a horizontal, or nearly horizontal structural member designed to carry loads.

ISSUE See issues I-330, I-365 for changes made in IFC Release 1.5.1

19.8.2. Attribute and Relationship Definitions

Superclasses and Subclasses

IfcRoot
IfcObject
IfcProduct
IfcElement
IfcBuildingElement
IfcBeam

Attributes and Relationships

	Attribute / Relation	Definition	Data or Rel. Type	Min.	Max.	Default
OPT	calcBeamSectionArea	Total Gross (physical) Area of the cross section (or profile) of the beam. Exposed as an attribute by file-based exchange, particularly for receiving applications with limited (or not existing) geometric capabilities.	IfcAreaMeasure	see type	see type	NIL
OPT	calcBeamVolume	Total Gross (physical) Volume of the beam. Exposed as an attribute by file-based exchange, particularly for receiving applications with limited (or not existing) geometric capabilities.	IfcVolumeMeasure	see type	see type	NIL

Formal Propositions

WR62	The material attribute of a beam shall use IfcMaterialComposite as the proper select type.

Copyright © International Alliance for Interoperability - 1996-1999

19.8.3. Interface Definitions

- I_Beam

19.8.4. Geometry Use Definitions

Object Geometry in Context

The geometric representation of IfcBeam is given by the IfcProductDefinitionShape, allowing multiple geometric representation. Included are:

Local Placement

The definition of the object coordinate system for IfcBeam is defined in it's supertype IfcProduct. It is defined by the

- IfcLocalPlacement, which defines the local coordinate system that is referenced by all geometric representations.

Standard Geometric Representation

The standard geometric representation of IfcBeam is defined using the **attribute driven geometry**. The following constraints apply to the standard representation:

- *Solid*: IfcAttDrivenExtrudedSolid is required, referring to a single segment,
- *Segment*: IfcAttDrivenExtrudedSegment is required,
- *Profile*: IfcRectangleProfileDef shall be supported.
- *Extrusion*: The profile shall be extruded horizontally, i.e., coplanar to the XY plane of the co-ordinate system of element container, i.e. site, building or building storey)

Example for standard geometric representation

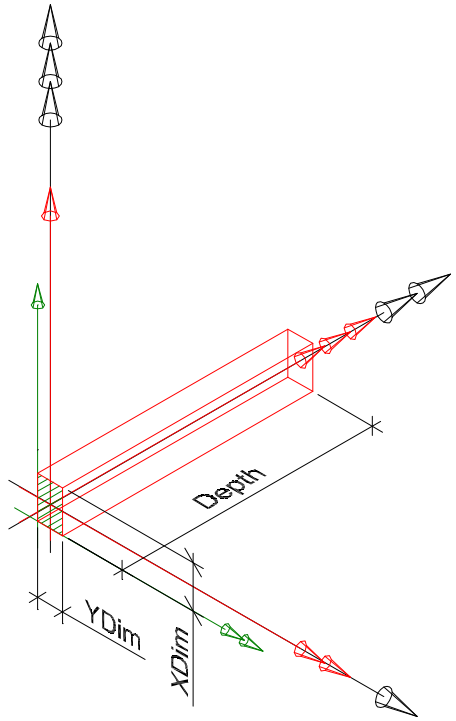

Extrusion

Extrusion path, for standard representation given by IfcAttDrivenExtrudedSolid referencing a single IfcAttDrivenExtrudedSegment
Default Type: **IfcAttDrivenExtrudedSegment**

- IfcAttDrivenExtrudedSegment.Depth, Extrusion path defined by a positive length measure along the local z-axis, interpreted as beam length

Profile

Extrusion profile, for standard representation given by IfcAttDrivenExtrudedSegment referencing IfcAttDrivenProfileDef
Default Type: **IfcRectangleProfileDef**

- YDim interpreted as beam width, XDim interpreted as beam height.

Extrusion Direction

The beam profile is extruded horizontally, i.e. coplanar to the XY plane of the co-ordinate system of the building storey.

Placement

[Black arrows] The local placement of beam is placed relative to the co-ordinate system of the element container object, here IfcBuildingStorey.
[Red arrows] The segment is placed relative to the local placement.
[Green arrows] The profile is placed relative to the XY plane of the placement co-ordinate system of the segment.

Advanced Geometric Representation

The advanced geometric representation of IfcBeam is defined using the **attribute driven geometry**. The following constraints apply to the advanced representation:

Copyright © International Alliance for Interoperability - 1996-1999

- *Solid*: IfcAttDrivenExtrudedSolid and IfcAttDrivenClippedExtrudedSolid is required, referring to a single or multiple segments,
- *Segment*: IfcAttDrivenExtrudedSegment, IfcAttDrivenTaperedExtrudedSegment, and IfcAttDrivenMorphedExtrudedSegment is required,
- *Profile*: IfcRectangleProfileDef, IfcCircleProfileDef and IfcArbitraryProfileDef shall be supported.
- *Extrusion*: All extrusion directions shall be supported

Example for advanced geometric representation

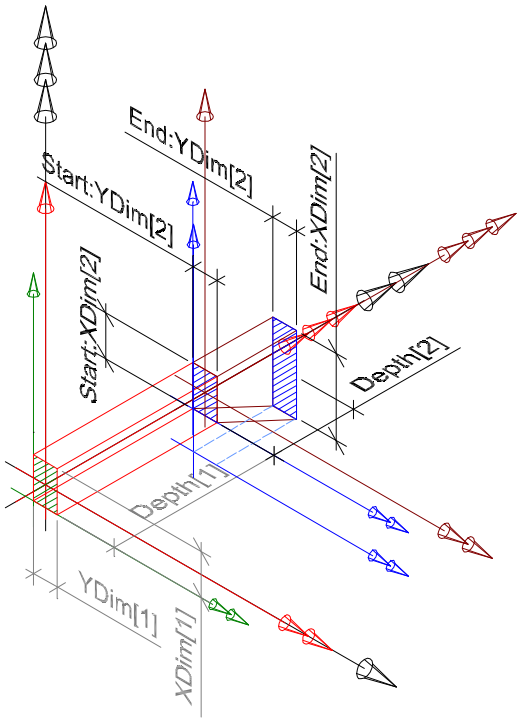

Extrusion

Extrusion path, for standard representation given by IfcAttDrivenExtrudedSolid or IfcAttDrivenClippedExtrudedSolid referencing multiple (here two) IfcAttDrivenExtrudedSegment.
Default Type: Set of **IfcAttDrivenExtrudedSegment** and/or of **IfcAttDrivenMorphedExtrudedSegment** and/or **IfcAttDrivenTaperedExtrudedSegment** (Hereby haunched beams are supported)

- IfcAttDrivenExtrudedSegment[1..n].Depth, Extrusion paths defined by a positive length measure along the local z-axis.
- In case of IfcAttDrivenMorphedExtrudedSegment start and end profiles are given (see type for constraints on morphing)

Profile

Extrusion profile, for standard representation given by each IfcAttDrivenExtrudedSegment referencing IfcAttDrivenProfileDef
Default Type: **IfcRectangleProfileDef**

- YDim interpreted as beam width, XDim interpreted as beam heigth.

Other Types: **IfcCircleProfileDef**

- Radius interpreted as beam radius.

Other Types: **IfcArbitraryProfileDef**

- IfcBoundedCurve (closed and 2D) defining an arbitrary beam shape

Extrusion Direction

The beam profile is extruded in any direction.

Placement

[Black arrows] The local placement of beam is placed relative to the co-ordinate system of the element container (e.g. the building storey).
[Red and brown arrows] The segments are placed relative to the local placement.
[Green and blue arrows] The profiles are placed relative to the XY planes of the placement co-ordinate systems of the segments.

Arbitrary Geometric Representation

The arbitrary geometric representation of IfcBeam is defined using **explicit geometry**. The faceted B-Rep capabilities (with or without voids) shall be supported for arbitrary representation.

19.9. Class IfcBuiltIn

19.9.1. Class Semantic Definition

Definition from IAI:: Generalization for elements that are assembled on site; built-in and attached to the building permanently (e.g. built-in cabinets, countertops, railings, etc.).

ISSUE See issue I-159 for changes made in IFC Release 1.5.

19.9.2. Attribute and Relationship Definitions

Superclasses and Subclasses

IfcRoot
  IfcObject

Copyright © International Alliance for Interoperability - 1996-1999

IfcProduct
IfcElement
IfcBuildingElement
IfcBuiltIn
IfcCabinet
IfcCounterOrShelf
IfcBuiltInAccessory

Attributes and Relationships

No attributes defined at this level.

19.9.3. Interface Definitions

- I_BuiltIn

19.9.4. Geometry Use Definitions

Object Geometry in Context

The geometric representation of IfcBuiltIn is given by the IfcProductDefinitionShape, allowing multiple geometric representation. Included are:

Local Position

The Reference Geometry for IfcBuiltIn is defined in it's supertype IfcProduct. It is defined by the

- IfcLocalPlacement, which defines the local coordinate system that is referenced by all geometric representations.

Standard Geometric Representation

The standard geometric representation of IfcBuiltIn is defined using **explicit geometry**. The faceted B-Rep capabilities (with or without voids) shall be supported for standard representation.

Currently, the usage of attribute driven geometry for IfcBuiltIn is not supported.

Advanced Geometric Representation

The advanced geometric representation of IfcBuiltIn is defined using **explicit geometry**. The faceted B-Rep capabilities (with or without voids) shall be supported for standard representation.

Currently, the usage of attribute driven geometry for IfcBuiltIn is not supported.

Arbitrary Geometric Representation

The arbitrary geometric representation of IfcBuiltIn is defined using **explicit geometry**. The faceted B-Rep capabilities (with or without voids) shall be supported for standard representation.

Currently, there is no difference in the usage of standard, advanced and arbitrary geometric representations for IfcBuiltIn.

19.10. Class IfcColumn

19.10.1. Class Semantic Definition

Definition from IAI: A vertical structural member which often is aligned with a structural grid intersection. IfcColumn is defined in the Architecture Domain and possibly reused by other domains. It represents a vertical, or nearly vertical structural member designed to transfer loads to its base.

Copyright © International Alliance for Interoperability - 1996-1999

ISSUE See issues I-330, I-365 for changes made in IFC Release 1.5.1

19.10.2. Attribute and Relationship Definitions

Superclasses and Subclasses

IfcRoot
IfcObject
IfcProduct
IfcElement
IfcBuildingElement
IfcColumn

Attributes and Relationships

	Attribute / Relation	Definition	Data or Rel. Type	Min.	Max.	Default
OPT	calcColumnSectionArea	Total Gross (physical) Area of the cross section (or profile) of the column. Exposed as an attribute by file-based exchange, particularly for receiving applications with limited (or not existing) geometric capabilities.	IfcAreaMeasure	see type	see type	NIL
OPT	calcColumnVolume	Total Gross (physical) Volume of the column. Exposed as an attribute by file-based exchange, particularly for receiving applications with limited (or not existing) geometric capabilities.	IfcVolumeMeasure	see type	see type	NIL

Formal Propositions

WR62	The material attribute of a beam shall use IfcMaterialComposite as the proper select type.

19.10.3. Interface Definitions

- I_Column

19.10.4. Geometry Use Definitions

Object Geometry in Context

The geometric representation of IfcColumn is given by the IfcProductDefinitionShape, allowing multiple geometric representation. Included are:

Local Placement

The Reference Geometry for IfcColumn is defined in it's supertype IfcProduct. It is defined by the

- IfcLocalPlacement, which defines the local coordinate system that is referenced by all geometric representations.

Standard Geometric Representation

The standard geometric representation of IfcColumn is defined using the **attribute driven geometry**. The following constraints apply to the standard representation:

- *Solid*: IfcAttDrivenExtrudedSolid is required, referring to a single segment,
- *Segment*: IfcAttDrivenExtrudedSegment is required,
- *Profile*: IfcRectangleProfileDef and IfcCircleProfileDef shall be supported.
- *Extrusion*: The profile shall be extruded vertically, i.e., along the positive Z Axis of the co-ordinate system of element container, i.e. site, building or building storey)

Copyright © International Alliance for Interoperability - 1996-1999

Example for standard geometric representation

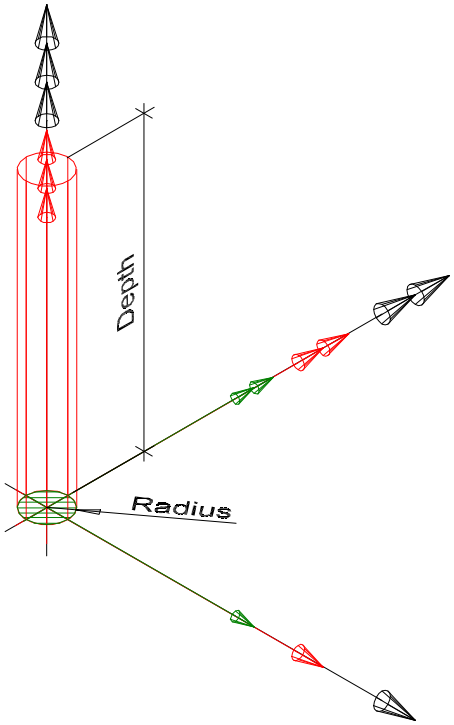

Extrusion

Extrusion path, for standard representation given by IfcAttDrivenExtrudedSolid referencing a single IfcAttDrivenExtrudedSegment
Default Type: **IfcAttDrivenExtrudedSegment**

- IfcAttDrivenExtrudedSegment.Depth, Extrusion path defined by a positive length measure along the local z-axis, interpreted as column height

Profile

Extrusion profile, for standard representation given by IfcAttDrivenExtrudedSegment referencing IfcAttDrivenProfileDef
Default Type: **IfcRectangleProfileDef**

- YDim interpreted as column width, XDim interpreted as column height.

Other Type: **IfcCircleProfileDef** (used in example)

- Radius is interpreted as column radius.

Extrusion Direction

The column profile is extruded vertically, i.e. along the z-axis of the co-ordinate system of the building storey.

Placement

[Black arrows] The local placement of beam is placed relative to the co-ordinate system of the element container object, here IfcBuildingStorey.
[Red arrows] The segment is placed relative to the local placement.
[Green arrows] The profile is placed relative to the XY plane of the placement co-ordinate system of the segment.

Advanced Geometric Representation

The advanced geometric representation of IfcColumn is defined using the **attribute driven geometry**. The following constraints apply to the advanced representation:

- *Solid*: IfcAttDrivenExtrudedSolid and IfcAttDrivenClippedExtrudedSolid is required, referring to a single or multiple segments,
- *Segment*: IfcAttDrivenExtrudedSegment, IfcAttDrivenTaperedExtrudedSegment and IfcAttDrivenMorphedExtrudedSegment is required,
- *Profile*: IfcRectangleProfileDef, IfcCircleProfileDef and IfcArbitraryProfileDef shall be supported.
- *Extrusion*: All extrusion directions shall be supported

Example for advanced geometric representation

Copyright © International Alliance for Interoperability - 1996-1999

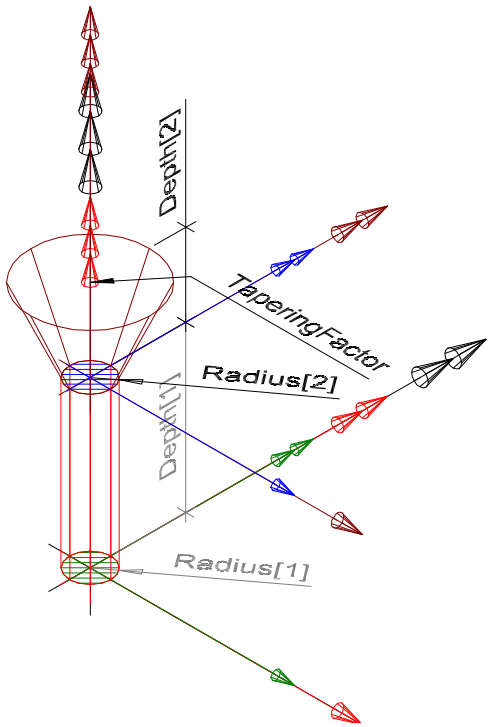

Extrusion

Extrusion path, for standard representation given by IfcAttDrivenExtrudedSolid referencing multiple (here two) IfcAttDrivenExtrudedSegment.
Default Type: Set of **IfcAttDrivenExtrudedSegment** and/or of **IfcAttDrivenMorphedExtrudedSegment** and/or **IfcAttDrivenTaperedExtrudedSegment** (Hereby "mushroom" columns are supported)

- IfcAttDrivenExtrudedSegment[1..n].Depth, Extrusion paths defined by a positive length measure along the local z-axis.
- In case of IfcAttDrivenMorphedExtrudedSegment start and end profiles are given (see type for constraints on morphing)

Profile

Extrusion profile, for standard representation given by each IfcAttDrivenExtrudedSegment referencing IfcAttDrivenProfileDef
Default Type: **IfcRectangleProfileDef**

- YDim interpreted as column width, XDim interpreted as column depth.

Other Types: **IfcCircleProfileDef** (used in example)

- Radius interpreted as column radius.

Other Types: **IfcArbitraryProfileDef**

- IfcBoundedCurve (closed and 2D) defining an arbitrary column shape

Extrusion Direction

The column profile is extruded in any direction.

Placement

[Black arrows] The local placement of column is placed relative to the co-ordinate system of the element container, e.g. the building storey.
[Red and brown arrows] The segments are placed relative to the local placement.
[Green and blue arrows] The profiles are placed relative to the XY planes of the placement co-ordinate systems of the segments.

Arbitrary Geometric Representation

The arbitrary geometric representation of IfcColumn is defined using **explicit geometry**. The faceted B-Rep capabilities (with or without voids) shall be supported for arbitrary representation.

19.11. Class IfcCovering

19.11.1. Class Semantic Definition

Definition from IAI: Supertype for any object which covers some part of and is fully dependent on another. Additionally, the geometry for this object is determined by the 'owning' object. Examples include wall, floor and ceiling coverings, finish trim, and base molding.

ISSUE See issue I-195 for changes made in IFC Release 1.5.
See issues I-330, I-365 for changes made in IFC Release 1.5.1

History

This Entity has changed after IFC Release 1.5.1, please see the Migration Guide for details

19.11.2. Attribute and Relationship Definitions

Superclasses and Subclasses

IfcRoot
  IfcObject
    IfcProduct
      IfcElement

Copyright © International Alliance for Interoperability - 1996-1999

IfcBuildingElement
IfcCovering

Attributes and Relationships

	Attribute / Relation	Definition	Data or Rel. Type	Min.	Max.	Default
	PredefinedType		IfcCoveringTypeEnum			
	LayerInformation	Relationship to the Material Layer Set Usage Information, that defines the offset, direction sense, and total thickness against the path definition of the attribute driven shape representation.	IfcMaterialLayerSetUsage	see type	see type	n/a
OPT	calcCoveringArea	Total Gross (physical) Area of the covering facing. Exposed as an attribute by file-based exchange, particularly for receiving applications with limited (or not existing) geometric capabilities.	IfcAreaMeasure	see type	see type	NIL
	HasMaterial	Ensures that the inherited HasMaterial relationship points to the same instance of IfcMaterialLayerSet as the referenced IfcMaterialLayerSetUsage.	IfcMaterialSelect	see type	see type	n/a
INV	Covers	Reference to the objectified relationship that handles the relationship of the Covering to the covered Building Element.	IfcRelCoversBldgElements	see type	see type	n/a
INV	AttachedTo	Reference to the objectified relationship that handles the relationship of the Covering to the space boundary to which the covering is attached to.	SET [0:?] OF IfcRelAttachesToBoundaries	see type	see type	n/a

Formal Propositions

WR63	
WR62	The material attribute of a covering shall use IfcMaterialLayerSet as the proper select type.

19.11.3. Interface Definitions

- I_Covering

19.11.4. Type Definitions

Common PropertySet

Pset_CoveringCommon

Type driven PropertySets

PreDefined Type	Associated PropertySet
Ceiling	Pset_CoveringCeiling
Flooring	Pset_CoveringFlooring
Cladding	Pset_CoveringCladding
CoveringMillwork	Pset_CoveringMillwork
NotDefined	
UserDefined	

Copyright © International Alliance for Interoperability - 1996-1999

19.11.5. Geometry Use Definitions

Object Geometry in Context

The geometric representation of IfcCovering is given by the IfcProductDefinitionShape, allowing multiple geometric representation. Included are:

Local Placement

The Reference Geometry for IfcCovering is defined in it's supertype IfcProduct. It is defined by the

- IfcLocalPlacement, which defines the local coordinate system that is referenced by all geometric representations.

Standard Geometric Representation

The standard geometric representation of IfcCovering is defined using the **attribute driven geometry**. The following constraints apply to the standard representation:

- *Solid*: only IfcAttDrivenExtrudedSolid is required, referring to a single segment,
- *Segment*: only IfcAttDrivenExtrudedSegment is required,
- *Profile*: only IfcRectangleProfileDef shall be supported.
- *Extrusion*: the profile shall be extruded along the z-axis of the local co-ordinate system of the building element which is covered (using the IfcRelCoversBldgElements relationship).

Example for standard geometric representation

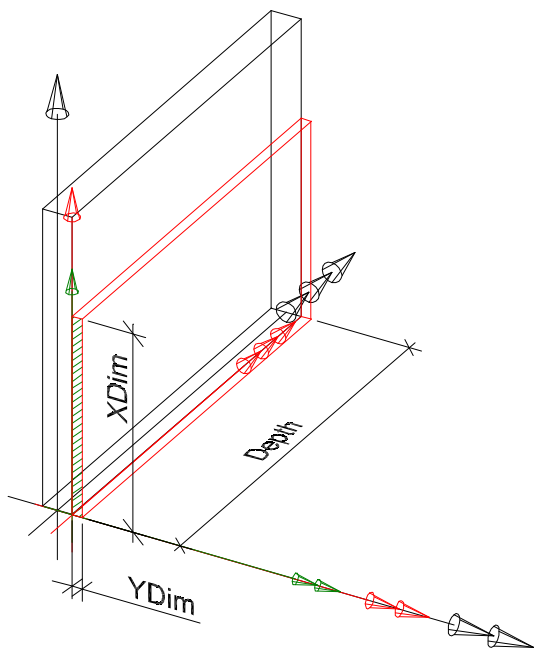

Extrusion

Extrusion path, for standard representation given by IfcAttDrivenExtrudedSolid referencing a single IfcAttDrivenExtrudedSegment
Default Type: **IfcAttDrivenExtrudedSegment**

- IfcAttDrivenExtrudedSegment.Depth, Extrusion path defined by a positive length measure along the local z-axis, interpreted as the length of the covering along the building element.

Profile

Extrusion profile, for standard representation given by IfcAttDrivenExtrudedSegment referencing IfcAttDrivenProfileDef
Default Type: **IfcRectangleProfileDef**

- YDim interpreted as covering thickness, XDim interpreted as height.

Extrusion Direction

The covering profile is extruded horizontally, i.e. along the z-axis of the co-ordinate system of the building element, which is covered.

Placement

[Black arrows] The local placement of beam is placed relative to the co-ordinate system of the building element which is covered.
[Red arrows] The segment is placed relative to the local placement.
[Green arrows] The profile is placed relative to the XY plane of the placement co-ordinate system of the segment.

Advanced Geometric Representation

The advanced geometric representation of IfcCovering is defined using the **attribute driven geometry**. The following constraints apply to the advanced representation:

- *Solid*: IfcAttDrivenExtrudedSolid, IfcAttDrivenClippedExtrudedSolid and IfcAttDrivenRevolvedSolid, IfcAttDrivenClippedRevolvedSolid is required, referring to a single segment,
- *Segment*: IfcAttDrivenExtrudedSegment and IfcAttDrivenRevolvedSolid is required,
- *Profile*: IfcRectangleProfileDef and IfcArbitraryProfileDef shall be supported,
- *Extrusion*: the profile shall be extruded along the z-axis of the local co-ordinate system of the building element which is covered (using the IfcRelCoversBldgElements relationship).

Example for advanced geometric representation

Copyright © International Alliance for Interoperability - 1996-1999

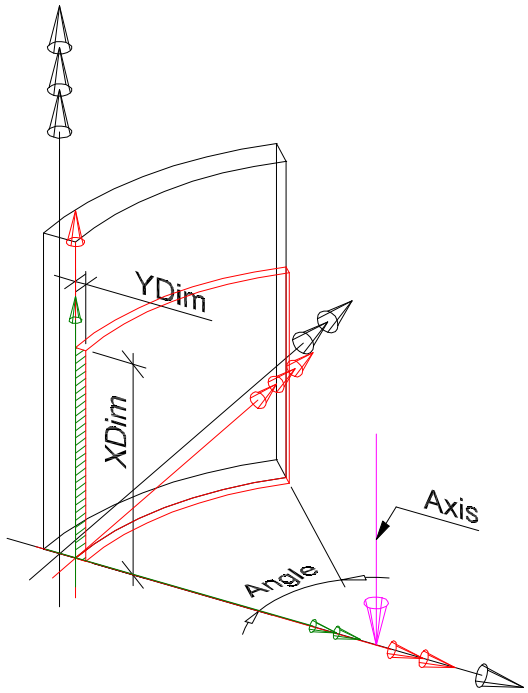

Extrusion

Extrusion path, for standard representation given by IfcAttDrivenExtrudedSolid, IfcAttDrivenClippedExtrudedSolid and IfcAttDrivenRevolvedSolid, IfcAttDrivenClippedRevolvedSolid referencing a single IfcAttDrivenExtrudedSegment or IfcAttDrivenRevolvedSolid.
Default Type: **IfcAttDrivenExtrudedSegment**

- IfcAttDrivenExtrudedSegment.Depth, Extrusion path defined by a positive length measure along the local z-axis, interpreted as the length of the covering along the building element.

Other Type: **IfcAttDrivenRevolvedSegment** (used in example)

- IfcAttDrivenRevolvedSegment.Axis, IfcAxis1Placement defining the axis for revolution (shall be the same as for the covered building element); IfcAttDrivenRevolvedSegment.Angle plane angle measure defining the arc length of the covering along the building element.

Profile

Extrusion profile, for standard representation given by IfcAttDrivenExtrudedSegment referencing IfcAttDrivenProfileDef
Default Type: **IfcRectangleProfileDef**

- YDim interpreted as covering thickness, XDim interpreted as covering height

Other Type: **IfcArbitraryProfileDef**

- CurveForSurface: closed bounded curve interpreted as covering area of the covering

Extrusion Direction

The covering profile is extruded horizontally, i.e. along the z-axis of the co-ordinate system of the building element, which is covered.

Placement

[Black arrows] The local placement of beam is placed relative to the co-ordinate system of the building element which is covered.
[Red arrows] The segment is placed relative to the local placement.
[Green arrows] The profile is placed relative to the XY plane of the placement co-ordinate system of the segment.

Arbitrary Geometric Representation

The arbitrary geometric representation of IfcColumn is defined using **explicit geometry**. The faceted B-Rep capabilities (with or without voids) shall be supported for arbitrary representation.

19.12. Class IfcCurtainWall

19.12.1. Class Semantic Definition

Definition from IAI: Exterior wall of a building which is an assembly of components, hung from the edge of the floor/roof structure rather than bearing on a floor. Curtain wall is represented as an building element assembly and implemented as subtype of IfcBuildingElement that uses an IfcRelAssembliesElement relationship.

History

New Entity in IFC Release 2.0

19.12.2. Attribute and Relationship Definitions

Superclasses and Subclasses

IfcRoot
  IfcObject
    IfcProduct
      IfcElement
        IfcBuildingElement

Copyright © International Alliance for Interoperability - 1996-1999

IfcCurtainWall

Attributes and Relationships

No attributes defined at this level.

Formal Propositions

WR61	Either the curtain wall is not decomposed into its curtain wall elements (the curtain wall can have independent geometry), or the geometry shall not be given at IfcCurtainWall directly.

19.12.3. Interface Definitions

- I_CurtainWall

19.12.4. Geometry Use Definitions

Object Geometry in Context

The geometric representation of IfcCurtainWall is given by the IfcProductDefinitionShape, allowing multiple geometric representation. Independent geometric representations, as described below, should only be used when the IfcCurtainWall is not defined as an aggregate. If defined as an aggregate, the geometric representation is the sum of the representation of the components within the aggregate.

Local Position

The Reference Geometry for IfcCurtainWall is defined in it's supertype IfcProduct. It is defined by the

- IfcLocalPlacement, which defines the local coordinate system that is referenced by all geometric representations.

Standard Geometric Representation

The standard geometric representation of IfcCurtainWall is defined using **explicit geometry**. The faceted B-Rep capabilities (with or without voids) shall be supported for standard representation.

Currently, the usage of attribute driven geometry for IfcCurtainWall is not supported.

Advanced Geometric Representation

The advanced geometric representation of IfcCurtainWall is defined using **explicit geometry**. The faceted B-Rep capabilities (with or without voids) shall be supported for standard representation.

Currently, the usage of attribute driven geometry for IfcCurtainWall is not supported.

Arbitrary Geometric Representation

The arbitrary geometric representation of IfcCurtainWall is defined using **explicit geometry**. The faceted B-Rep capabilities (with or without voids) shall be supported for standard representation.

Currently, there is no difference in the usage of standard, advanced and arbitrary geometric representations for IfcCurtainWall.

19.13. Class IfcDoor

19.13.1. Class Semantic Definition

Definition from IAI: IfcDoor is defined in the Architecture Domain and possibly reused by other domains. It represents a construction for closing an opening, intended primarily for access.

Copyright © International Alliance for Interoperability - 1996-1999

ISSUE See issue I-303, I-330 for changes made in IFC Release 1.5.1.

19.13.2. Attribute and Relationship Definitions

Superclasses and Subclasses

IfcRoot
IfcObject
IfcProduct
IfcElement
IfcBuildingElement
IfcDoor

Attributes and Relationships

No attributes defined at this level.

Formal Propositions

WR61	Either the door handles the geometric representation (if not subdivided into ist components by IfcRelAssemblesElements) or it is handled by the constituent parts - door frame and door panel.

19.13.3. Interface Definitions

- I_Door

19.13.4. Geometry Use Definitions

The geometric representation of IfcDoor is given by the IfcProductDefinitionShape, allowing multiple geometric representation. Independent geometric representations, as described below, should only be used when the IfcCurtainWall is not defined as an aggregate. If defined as an aggregate, the geometric representation is the sum of the representation of the components within the aggregate.

Included are:

Local Placement

The Reference Geometry for IfcDoor is defined in it's supertype IfcProduct. It is defined by the

- IfcLocalPlacement, which defines the local coordinate system that is referenced by all geometric representations.

Geometric Representation

The standard geometric representation of IfcDoor is defined as agreed by the implementers agreement for IFC Release 1.5.1. Eventual changes for Release 2.0 still needs to be defined.

19.14. Class IfcDoorLining

19.14.1. Class Semantic Definition

Definition from IAI: A description of the door lining.

History

New Entity in IFC Release 2.0

See AR-1 for requirements for IFC Release 2.0

Copyright © International Alliance for Interoperability - 1996-1999

19.14.2. Attribute and Relationship Definitions

Superclasses and Subclasses

IfcRoot
  IfcObject
    IfcProduct
      IfcElement
        IfcBuildingElement
          IfcDoorLining

Attributes and Relationships

No attributes defined at this level.

19.14.3. Interface Definitions

- I_DoorFrame

19.14.4. Geometry Use Definitions

Object Geometry in Context

The geometric representation of IfcDoorLining is given by the IfcProductDefinitionShape, allowing multiple geometric representation. Included are:

Local Placement

The Reference Geometry for IfcDoorLining is defined in it's supertype IfcProduct. It is defined by the

- IfcLocalPlacement, which defines the local coordinate system that is referenced by all geometric representations.

Geometric Representation

The standard geometric representation of IfcDoorLining is defined as agreed for handling the door lining by the implementers agreement for IFC Release 1.5.1. Eventual changes for Release 2.0 still needs to be defined.

19.15. Class IfcDoorPanel

19.15.1. Class Semantic Definition

Definition from IAI: A description of the door panel.

History

New Entity in IFC Release 2.0

19.15.2. Attribute and Relationship Definitions

Superclasses and Subclasses

IfcRoot
  IfcObject
    IfcProduct
      IfcElement

Copyright © International Alliance for Interoperability - 1996-1999

IfcBuildingElement
IfcDoorPanel

Attributes and Relationships

	Attribute / Relation	Definition	Data or Rel. Type	Min.	Max.	Default
	PredefinedType	Predefined generic types are specified in an Enum. Type driven Psets are defined for each generic type (as the required attributes differ). The GenericType for a given instance drives determines the type of Pset attached at runtime throug the associated TypeDefinitions relationship (defined at the IfcObject supertype).	IfcDoorPanelTypeEnum	Swinging	NotDefined	Swinging

Formal Propositions

WR62	
WR61	The material attribute of a door panel shall use IfcMaterialList as the proper select type.

Informal Propositions

IP61	The material assigned for glazing (if given) shall be part of the material composite list assigned by the HasMaterial attribute as defined at the supertype.

19.15.3. Interface Definitions

- I_DoorPanel

19.15.4. Type Definitions

Common PropertySet

Pset_DoorPanelCommon

Type driven PropertySets

PreDefined Type	Associated PropertySet
Swinging	Pset_DoorPanelSwinging
Sliding	Pset_DoorPanelSliding
Revolving	Pset_DoorPanelRevolving
Rollingup	Pset_DoorPanelRollingup
NotDefined	
UserDefined	

19.15.5. Geometry Use Definitions

Object Geometry in Context

The geometric representation of IfcDoorPanel is given by the IfcProductDefinitionShape, allowing multiple geometric representation. Included are:

Local Placement

The Reference Geometry for IfcDoorPanel is defined in it's supertype IfcProduct. It is defined by the

Copyright © International Alliance for Interoperability - 1996-1999

- IfcLocalPlacement, which defines the local coordinate system that is referenced by all geometric representations.

Geometric Representation

The standard geometric representation of IfcDoorPanel is defined as agreed for handling the door lining by the implementers agreement for IFC Release 1.5.1. Eventual changes for Release 2.0 still needs to be defined.

19.16. Class IfcPermeableCovering

19.16.1. Class Semantic Definition

Definition from IAI: Permeable cover for an opening which allows airflow (definition BS 6100).

History

New Entity in IFC Release 2.0

19.16.2. Attribute and Relationship Definitions

Superclasses and Subclasses

IfcRoot
IfcObject
IfcProduct
IfcElement
IfcBuildingElement
IfcPermeableCovering

Attributes and Relationships

	Attribute / Relation	Definition	Data or Rel. Type	Min.	Max.	Default
	PredefinedType	Predefined generic types are specified in an Enum. Type driven Psets are defined for each generic type (as the required attributes differ). The GenericType for a given instance drives determines the type of Pset attached at runtime throug the associated TypeDefinitions relationship (defined at the IfcObject supertype).	IfcPermeableCoveringTypeEnum	Grate	Screen	Screen

Formal Propositions

WR61	

19.16.3. Interface Definitions

- I_PermeableOpeningCover

19.16.4. Type Definitions

Common PropertySet

Pset_PermeableCoveringCommon

Copyright © International Alliance for Interoperability - 1996-1999

Type driven PropertySets

PreDefined Type	Associated PropertySet
Grill	Pset_PermeableCoveringGrill
Louver	Pset_PermeableCoveringLouver
Screen	Pset_PermeableCoveringScreen
UserDefined	
NotDefined	

19.16.5. Geometry Use Definitions

Object Geometry in Context

The geometric representation of IfcPermeableCovering is given by the IfcProductDefinitionShape, allowing multiple geometric representation. Included are:

Local Position

The Reference Geometry for IfcPermeableCovering is defined in it's supertype IfcProduct. It is defined by the

- IfcLocalPlacement, which defines the local coordinate system that is referenced by all geometric representations.

Standard Geometric Representation

The standard geometric representation of IfcPermeableCovering is defined using **explicit geometry**. The faceted B-Rep capabilities (with or without voids) shall be supported for standard representation.

Currently, the usage of attribute driven geometry for IfcPermeableCovering is not supported.

Advanced Geometric Representation

The advanced geometric representation of IfcPermeableCovering is defined using **explicit geometry**. The faceted B-Rep capabilities (with or without voids) shall be supported for standard representation.

Currently, the usage of attribute driven geometry for IfcPermeableCovering is not supported.

Arbitrary Geometric Representation

The arbitrary geometric representation of IfcPermeableCovering is defined using **explicit geometry**. The faceted B-Rep capabilities (with or without voids) shall be supported for standard representation.

Currently, there is no difference in the usage of standard, advanced and arbitrary geometric representations for IfcPermeableCovering.

19.17. Class IfcRelAttachesToBoundaries

19.17.1. Class Semantic Definition

Definition from IAI: Objectified relationship between a space boundary and one to many coverings, which are attached to the space boundary.

History

New Entity in IFC Release 2.0

Copyright © International Alliance for Interoperability - 1996-1999

19.17.2. Attribute and Relationship Definitions

Superclasses and Subclasses

IfcRoot
IfcRelationship
IfcRelAttachesToBoundaries

Attributes and Relationships

	Attribute / Relation	Definition	Data or Rel. Type	Min.	Max.	Default
	RelatingSpaceBoundary	Relationship to the space boundary to which the covering is attached to.	IfcSpaceBoundary	see type	see type	n/a
	RelatedCoverings	Relationship to the list of coverings that are attached to the space boundary.	LIST [1:?] OF IfcCovering	1	N	1

19.17.3. Interface Definitions

- I_RelCoversBldgElements

19.17.4. Geometry Use Definitions

This objectified relationship does not carry additional geometry – there is no geometry use definition.

19.18. Class IfcRelCoversBldgElements

19.18.1. Class Semantic Definition

Definition from IAI: Objectified relationship between a building element and one to many coverings, which do cover the building element.

19.18.2. Attribute and Relationship Definitions

Superclasses and Subclasses

IfcRoot
IfcRelationship
IfcRelCoversBldgElements

Attributes and Relationships

	Attribute / Relation	Definition	Data or Rel. Type	Min.	Max.	Default
	RelatingBuildingElement	Relationship to the Building Element that is covered.	IfcBuildingElement	see type	see type	n/a
	RelatedCoverings	Relationship to the List of Coverings at this Building Element.	LIST [1:?] OF IfcCovering	1	N	1

19.18.3. Interface Definitions

- I_RelCoversBldgElements

Copyright © International Alliance for Interoperability - 1996-1999

19.18.4. Geometry Use Definitions

This objectified relationship does not carry additional geometry – there is no geometry use definition.

19.19. Class IfcRelJoinsElements

19.19.1. Class Semantic Definition

Definition from IAI: Describes either an expansion joint, edge condition, control joint.

History

New Entity in IFC Release 2.0

19.19.2. Attribute and Relationship Definitions

Superclasses and Subclasses

IfcRoot
IfcRelationship
IfcRelConnectsElements
IfcRelJoinsElements

Attributes and Relationships

	Attribute / Relation	Definition	Data or Rel. Type	Min.	Max.	Default
	JointElements	Objects that make up the joint (fill the gap)	LIST [0:?] OF IfcBuildingElement	n/a	n/a	empty list
	JoinType	Purpose of the joint	IfcJointEnum	Control	Expansion	NotDefined
OPT	RangeOfMovement	Distance the joint can open before failing	IfcPositiveLengthMeasure	0	n/a	NIL
OPT	FireRating	Time duration for fire resistence the roof assembly is rated	IfcTimeMeasure	0	n/a	NIL
	WaterProofingRequired	Flag that indicates that the joint should be waterproof or not	LOGICAL	FALSE	TRUE	UNKNOWN
	VentilationRequired	Is ventilation required for this joint?	LOGICAL	FALSE	TRUE	UNKNOWN

19.19.3. Interface Definitions

- I_RelJoinsElements

19.19.4. Geometry Use Definitions

This objectified relationship does not carry additional geometry – there is no geometry use definition.

19.20. Class IfcRoof

19.20.1. Class Semantic Definition

Definition from IAI: A description of the total roof.

Copyright © International Alliance for Interoperability - 1996-1999

History

New Entity in IFC Release 2.0

19.20.2. Attribute and Relationship Definitions

Superclasses and Subclasses

IfcRoot
IfcObject
IfcProduct
IfcElement
IfcBuildingElement
IfcRoof

Attributes and Relationships

	Attribute / Relation	Definition	Data or Rel. Type	Min.	Max.	Default
OPT	calcTotalRoofSurfaceArea	Total surface area of the roof. Note: this is a calculated value, based on all of the roofslabs included in this roof.	IfcAreaMeasure	n/a	n/a	NIL

Formal Propositions

WR61	Either the roof is not decomposed into its roof slabs (the roof can have independent geometry), or the geometry shall not be given at IfcRoof directly.

19.20.3. Interface Definitions

- I_Roof

19.20.4. Geometry Use Definitions

Object Geometry in Context

The geometric representation of IfcRoof is given by the IfcProductDefinitionShape, allowing multiple geometric representation. Independent geometric representations, as described below, should only be used when the IfcCurtainWall is not defined as an aggregate. If defined as an aggregate, the geometric representation is the sum of the representation of the components within the aggregate.

Local Position

The Reference Geometry for IfcRoof is defined in it's supertype IfcProduct. It is defined by the

- IfcLocalPlacement, which defines the local coordinate system that is referenced by all geometric representations.

Standard Geometric Representation

The standard geometric representation of IfcRoof is defined using **explicit geometry**. The faceted B-Rep capabilities (with or without voids) shall be supported for standard representation.

Currently, the usage of attribute driven geometry for IfcRoof is not supported.

Advanced Geometric Representation

The advanced geometric representation of IfcRoof is defined using **explicit geometry**. The faceted B-Rep capabilities (with or without voids) shall be supported for standard representation.

Currently, the usage of attribute driven geometry for IfcRoof is not supported.

Copyright © International Alliance for Interoperability - 1996-1999

Arbitrary Geometric Representation

The arbitrary geometric representation of IfcRoof is defined using **explicit geometry**. The faceted B-Rep capabilities (with or without voids) shall be supported for standard representation.

Currently, there is no difference in the usage of standard, advanced and arbitrary geometric representations for IfcRoof.

19.21. Class IfcSlab

19.21.1. Class Semantic Definition

Definition from IAI: Slab (shape) component of the construction that normally encloses a space vertically. Construction that provides the lower surface (floor) or upper surface (roof slab) in any space in a building. It shall be noted, that only the core or constructional part of this construction is considered to be a slap. The upper finish (flooring, roofing) and the lower finish (ceiling) are considered to be coverings.

ISSUE See issues I-155, I-156, I-157 for changes made in IFC Release 1.5.
See issues I-330, I-365 for changes made in IFC Release 1.5.1

19.21.2. Attribute and Relationship Definitions

Superclasses and Subclasses

IfcRoot
IfcObject
IfcProduct
IfcElement
IfcBuildingElement
IfcSlab
IfcLanding

Attributes and Relationships

	Attribute / Relation	Definition	Data or Rel. Type	Min.	Max.	Default
	PredefinedType	Predefined generic types are specified in an Enum. Type driven Psets are defined for each generic type (as the required attributes differ). The GenericType for a given instance drives determines the type of Pset attached at runtime throug the associated TypeDefinitions relationship (defined at the IfcObject supertype).	IfcSlabTypeEnum	SolidSlab	ElementedSlab	NotDefined
	LayerInformation	Relationship to the Material Layer Set Usage Information, that defines the offset, direction sense, and total thickness against the path definition of the attribute driven shape representation.	IfcMaterialLayerSetUsage	see type	see type	n/a
OPT	calcSlabArea	Total Gross (physical) Area of the slab. Exposed as an attribute by file-based exchange, particularly for receiving applications with limited (or not existing) geometric capabilities.	IfcAreaMeasure	see type	see type	NIL
OPT	calcSlabVolume	Total Gross (physical) Volume of the	IfcVolumeMeasure	see type	see type	NIL

Copyright © International Alliance for Interoperability - 1996-1999

		slab. Exposed as an attribute by file-based exchange, particularly for receiving applications with limited (or not existing) geometric capabilities.				
	HasMaterial	Ensures that the inherited HasMaterial relationship points to the same instance of IfcMaterialLayerSet as the referenced IfcMaterialLayerSetUsage.	IfcMaterialSelect	see type	see type	n/a

Formal Propositions

WR63	
WR62	The material attribute of a slab shall use IfcMaterialLayerSet as the proper select type.

19.21.3. Interface Definitions

- I_RoofSlab

19.21.4. Type Definitions

Common PropertySet

Pset_SlabCommon

Type driven PropertySets

PreDefined Type	Associated PropertySet
Floor	Pset_SlabFloor
Roof	Pset_SlabRoof
NotDefined	
UserDefined	

19.21.5. Geometry Use Definitions

Object Geometry in Context

The geometric representation of IfcSlab is given by the IfcProductDefinitionShape, allowing multiple geometric representation. Included are:

Local Placement

The Reference Geometry for IfcSlab is defined in it's supertype IfcProduct. It is defined by the

- IfcLocalPlacement, which defines the local coordinate system that is referenced by all geometric representations.

Standard Geometric Representation

The standard geometric representation of IfcSlab is defined using the **attribute driven geometry**. The following constraints apply to the standard representation:

- *Solid*: IfcAttDrivenExtrudedSolid is required, referring to a single segment.
- *Segment*: IfcAttDrivenExtrudedSegment is required.
- *Profile*: IfcRectangleProfileDef and IfcArbitraryProfileDef shall be supported.
- *Extrusion*: The profile shall be extruded vertically, i.e., along the positive Z Axis of the co-ordinate system of the element container, i.e. site, building or building storey

Example for standard geometric representation

Copyright © International Alliance for Interoperability - 1996-1999

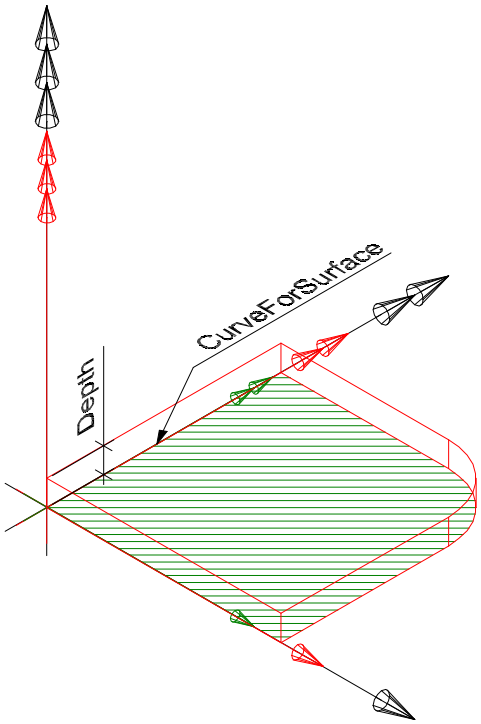

Extrusion

Extrusion path, for standard representation given by IfcAttDrivenExtrudedSolid referencing a single IfcAttDrivenExtrudedSegment
Default Type: **IfcAttDrivenExtrudedSegment**

- IfcAttDrivenExtrudedSegment.Depth, Extrusion path defined by a positive length measure along the local z-axis, interpreted as the thickness of the roof slab.

Profile

Extrusion profile, for standard representation given by IfcAttDrivenExtrudedSegment referencing IfcAttDrivenProfileDef
Default Type: **IfcRectangleProfileDef**

- XDim interpreted as length of roof slab, YDim interpreted as width of roof slab.

Other Type: **IfcArbitraryProfileDef**

- CurveForSurface: closed bounded curve interpreted as area (or foot print) of the roof slab.

Extrusion Direction

The slab profile is extruded vertically, i.e. along the z-axis of the co-ordinate system of the element container (e.g., the building storey).

Placement

[Black arrows] The local placement of slab is placed relative to the co-ordinate system of the element container, e.g., the building storey.
[Red arrows] The segment is placed relative to the local placement.
[Green arrows] The profile is placed relative to the XY plane of the placement co-ordinate system of the segment.

Advanced Geometric Representation

The advanced geometric representation of IfcSlab is defined using the **attribute driven geometry**. The following constraints apply to the advanced representation:

- *Solid*: IfcAttDrivenExtrudedSolid and IfcAttDrivenClippedExtrudedSolid is required, referring to a single or multiple segments.
- *Segment*: IfcAttDrivenExtrudedSegment is required.
- *Profile*: IfcRectangleProfileDef and IfcArbitraryProfileDef shall be supported.
- *Extrusion*: All extrusion directions shall be supported.

Example for advanced geometric representation

Copyright © International Alliance for Interoperability - 1996-1999

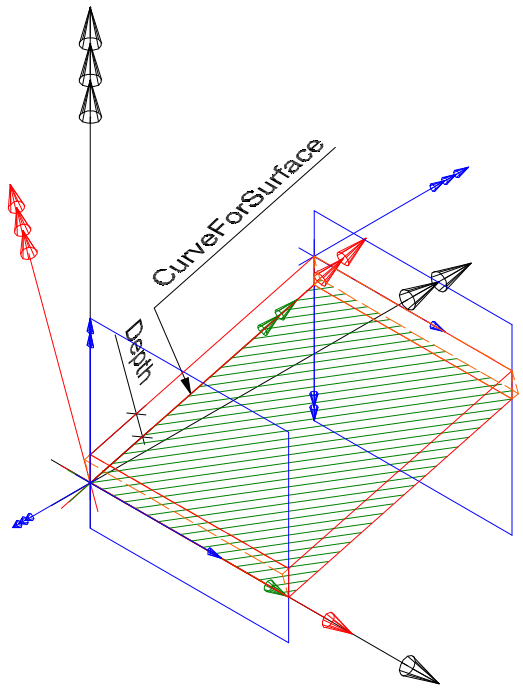

Extrusion

Extrusion path, for standard representation given by IfcAttDrivenExtrudedSolid or IfcAttDrivenClippedExtrudedSolid referencing a single IfcAttDrivenExtrudedSegment
Default Type: **IfcAttDrivenExtrudedSegment**

- IfcAttDrivenExtrudedSegment.Depth, Extrusion path defined by a positive length measure along the local z-axis, interpreted as the thickness of the roof slab.

Profile

Extrusion profile, for standard representation given by IfcAttDrivenExtrudedSegment referencing IfcAttDrivenProfileDef
Default Type: **IfcRectangleProfileDef**

- XDim interpreted as length of roof slab, YDim interpreted as width of roof slab.

Other Type: **IfcArbitraryProfileDef**

- CurveForSurface: closed bounded curve interpreted as area (or foot print) of roof slab.

Extrusion Direction

The slab profile shall be extruded into any direction.

Placement

[Black arrows] The local placement of slab is placed relative to the co-ordinate system of the element container, e.g., the building storey.
[Red arrows] The segment is placed relative to the local placement.
[Green arrows] The profile is placed relative to the XY plane of the placement co-ordinate system of the segment.

Arbitrary Geometric Representation

The arbitrary geometric representation of IfcSlab is defined using **explicit geometry**. The faceted B-Rep capabilities (with or without voids) shall be supported for arbitrary representation.

19.22. Class IfcWall

19.22.1. Class Semantic Definition

Definition from IAI: IfcWall represents a vertical construction that bounds or subdivides Spaces. It is the common concept of a wall that will be later specialized in the various domains.

ISSUE See issue I-155, I-156, I-157 for changes made in IFC Release 1.5.
See issues I-288, I-330, I-365 for changes made in IFC Release 1.5.1

19.22.2. Attribute and Relationship Definitions

Superclasses and Subclasses

IfcRoot
IfcObject
IfcProduct
IfcElement
IfcBuildingElement
IfcWall

Attributes and Relationships

	Attribute / Relation	Definition	Data or Rel. Type	Min.	Max.	Default
	LayerInformation	Relationship to the Material Layer Set Usage Information, that defines the offset, direction sense, and total	IfcMaterialLayerSetUsage	see type	see type	n/a

Copyright © International Alliance for Interoperability - 1996-1999

		thickness against the path definition of the attribute driven shape representation.				
OPT	calcWallArea	Total Gross (physical) Area of the wall. Measured as vertical wall face, perpendicular to the center line of the wall. Exposed as an attribute by file-based exchange, particularly for receiving applications with limited (or not existing) geometric capabilities.	IfcAreaMeasure	see type	see type	NIL
OPT	calcWallVolume	Total Gross (physical) Volume of the wall. Exposed as an attribute by file-based exchange, particularly for receiving applications with limited (or not existing) geometric capabilities.	IfcVolumeMeasure	see type	see type	NIL
	HasMaterial	Ensures that the inherited HasMaterial relationship points to the same instance of IfcMaterialLayerSet as the referenced IfcMaterialLayerSetUsage.	IfcMaterialSelect	see type	see type	n/a

Formal Propositions

WR62	The material attribute of a wall shall use IfcMaterialLayerSet as the proper select type.

19.22.3. Interface Definitions

- I_Wall

19.22.4. Geometry Use Definitions

Object Geometry in Context

The geometric representation of IfcWall is given by the IfcProductDefinitionShape, allowing multiple geometric representation. Included are:

Local Placement

The Reference Geometry for IfcWall is defined in it's supertype IfcProduct. It is defined by the

- IfcLocalPlacement, which defines the local coordinate system that is referenced by all geometric representations.

Standard Geometric Representation

The standard geometric representation of IfcWall is defined using the **attribute driven geometry**. The following constraints apply to the standard representation:

- *Solid*: IfcAttDrivenExtrudedSolid is required, referring to a single segment.
- *Segment*: IfcAttDrivenExtrudedSegment is required.
- *Profile*: IfcRectangleProfileDef shall be supported.
- *Extrusion*: The profile shall be extruded horizontally, i.e., coplanar to the XY Plane of the co-ordinate system of the element container
- *Connection*: The IfcRelConnectsPathElements relationship shall be used at least for both horizontal ends of the IfcWall, if those ends connect to other building elements. The connection geometry shall not be specified to allow for logical connections using the priorities only. Only single layer walls can be connected.

Example for standard geometric representation

Copyright © International Alliance for Interoperability - 1996-1999

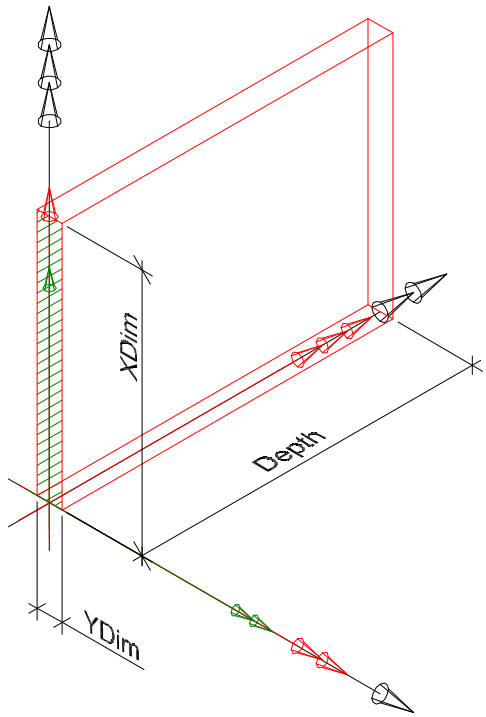

Extrusion

Extrusion path, for standard representation given by IfcAttDrivenExtrudedSolid referencing a single IfcAttDrivenExtrudedSegment
Default Type: **IfcAttDrivenExtrudedSegment**

- IfcAttDrivenExtrudedSegment.Depth, Extrusion path defined by a positive length measure along the local z-axis, interpreted as the length of the wall.

Profile

Extrusion profile, for standard representation given by IfcAttDrivenExtrudedSegment referencing IfcAttDrivenProfileDef
Default Type: **IfcRectangleProfileDef**

- YDim interpreted as wall thickness, XDim interpreted as wall height.

Extrusion Direction

The wall profile is extruded horizontally, i.e. co-planar to the XY plane of the co-ordinate system of the element container, e.g. the building storey.

Placement

[Black arrows] The local placement of beam is placed relative to the co-ordinate system of the building element which is covered.
[Red arrows] The segment is placed relative to the local placement.
[Green arrows] The profile is placed relative to the XY plane of the placement co-ordinate system of the segment.

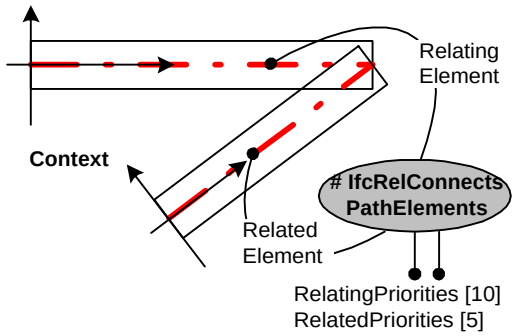

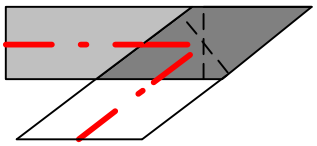

Connection

The walls are connected using the IfcRelConnectsPathElements logical relationship, i.e. no connection geometry is given. The intersection of both lengthened walls (when viewed in ground view) shall be added to the wall with higher priorities (as given by the RelatingPriorities and RelatedPriorities attributes. If the priorities are equal, the intersection shall be added to the RelatingElement.

The following additional propositions for standard geometric representation (with standard connectivity) apply:

- Both walls shall be single layer walls
- Both walls shall have the same height (XDim attribute)

Advanced Geometric Representation

The advanced geometric representation of IfcWall is defined using the **attribute driven geometry**. The following constraints apply to the advanced representation:

- *Solid*: IfcAttDrivenExtrudedSolid, IfcAttDrivenClippedExtrudedSolid and IfcAttDrivenRevolvedSolid, IfcAttDrivenClippedRevolvedSolid is required, referring to a single or multiple segments.
- *Segment*: IfcAttDrivenExtrudedSegment, IfcAttDrivenRevolvedSegment is required.
- *Profile*: IfcRectangleProfileDef shall be supported.
- *Extrusion*: The profile shall be extruded horizontally, i.e., coplanar to the XY Plane of the co-ordinate system of the element container i.e. site, building or building storey.
- *Connection*: The IfcRelConnectsPathElements relationship shall be used at least for both horizontal ends of the IfcWall, if those ends connect to other building elements. The connection geometry shall be specified as IfcLineConnectionGeometry to allow for an explicit definition of the shape for the wall ends. Single and multiple layer walls shall be connected.

Copyright © International Alliance for Interoperability - 1996-1999

Example for advanced geometric representation

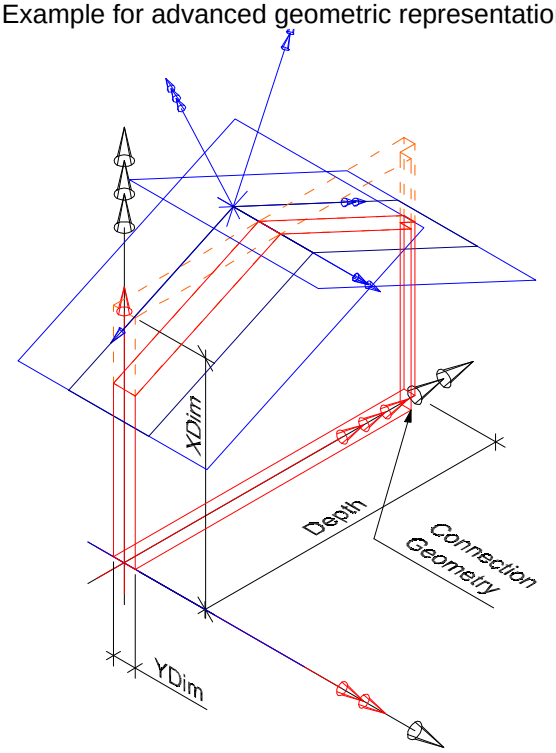

Extrusion

Extrusion path, for standard representation given by IfcAttDrivenExtrudedSolid IfcAttDrivenClippedExtrudedSolid and IfcAttDrivenRevolvedSolid, IfcAttDrivenClippedRevolvedSolid referencing a single or multiple IfcAttDrivenExtrudedSegment and/or IfcAttDrivenRevolvedSegment

Default Type: **IfcAttDrivenExtrudedSegment**

- IfcAttDrivenExtrudedSegment.Depth, Extrusion path defined by a positive length measure along the local z-axis, interpreted as the length of the wall.

Other Type: **IfcAttDrivenRevolvedSegment** (used in example)

- IfcAttDrivenRevolvedSegment.Axis, IfcAxis1Placement defining the axis for revolution; IfcAttDrivenRevolvedSegment.Angle plane angle measure defining the arc length of the wall.

Profile

Extrusion profile, for standard representation given by IfcAttDrivenExtrudedSegment referencing IfcAttDrivenProfileDef

Default Type: **IfcRectangleProfileDef**

- YDim interpreted as wall thickness, XDim interpreted as wall height.

Extrusion Direction

The wall profile is extruded horizontally, i.e. co-planar to the XY plane of the co-ordinate system of the element container, e.g. the building storey.

Placement

[Black arrows] The local placement of wall is placed relative to the co-ordinate system of the element container (e.g. the building storey).
[Red and brown arrows] The segments are placed relative to the local placement.
[Green and blue arrows] The profiles are placed relative to the XY planes of the placement co-ordinate systems of the segments.

Connection

The walls are connected using the IfcRelConnectsPathElements relationship, with connection geometry given by IfcLineConnectionGeometry. The LineOnRelatingElement cuts the shape of the relating wall (possible after lengthening the wall extrusion) and the LineOnRelatedElement cuts the shape of the related wall (possible after lengthening the wall extrusion). The RelatingPriorities and RelatedPriorities are not used in this case.

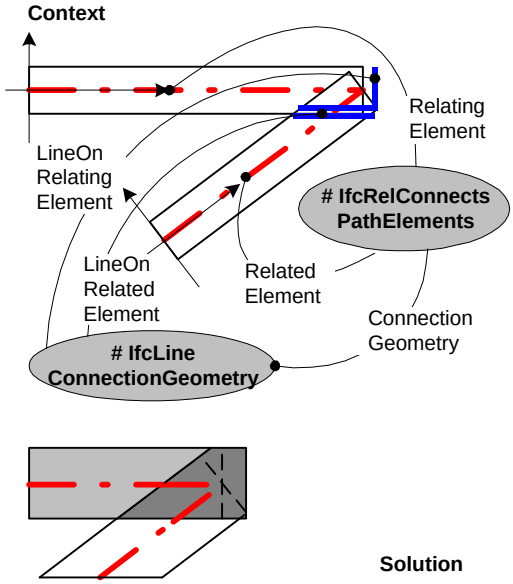

Arbitrary Geometric Representation

The arbitrary geometric representation of IfcWall is defined using **explicit geometry**. The faceted B-Rep capabilities (with or without voids) shall be supported for arbitrary representation.

Copyright © International Alliance for Interoperability - 1996-1999

19.23. Class IfcWindow

19.23.1. Class Semantic Definition

Definition from IAI: Construction for closing a vertical or near vertical opening in a wall or pitched roof that will admit light and may admit fresh air into the adjacent building space.

ISSUE See issue I-303, I-330 for changes made in IFC Release 1.5.1.

19.23.2. Attribute and Relationship Definitions

Superclasses and Subclasses

IfcRoot
IfcObject
IfcProduct
IfcElement
IfcBuildingElement
IfcWindow

Attributes and Relationships

No attributes defined at this level.

Formal Propositions

WR61	Either the door handles the geometric representation (if not subdivided into ist components by IfcRelAssemblesElements) or it is handled by the constituent parts - door frame and door panel.

19.23.3. Interface Definitions

- I_Window

19.23.4. Geometry Use Definitions

Object Geometry in Context

The geometric representation of IfcWindow is given by the IfcProductDefinitionShape, allowing multiple geometric representation. Independent geometric representations, as described below, should only be used when the IfcCurtainWall is not defined as an aggregate. If defined as an aggregate, the geometric representation is the sum of the representation of the components within the aggregate.

Included are:

Local Placement

The Reference Geometry for IfcWindow is defined in it's supertype IfcProduct. It is defined by the

- IfcLocalPlacement, which defines the local coordinate system that is referenced by all geometric representations.

Geometric Representation

The standard geometric representation of IfcWindow is defined as agreed by the implementers agreement for IFC Release 1.5.1. Eventual changes for Release 2.0 still needs to be defined.

Copyright © International Alliance for Interoperability - 1996-1999

19.24. Class IfcWindowLining

19.24.1. Class Semantic Definition

Definition from IAI: A description of the window frame.

History

New Entity in IFC Release 2.0

See AR-1 for requirements for IFC Release 2.0

19.24.2. Attribute and Relationship Definitions

Superclasses and Subclasses

IfcRoot
IfcObject
IfcProduct
IfcElement
IfcBuildingElement
IfcWindowLining

Attributes and Relationships

No attributes defined at this level.

19.24.3. Interface Definitions

- I_WindowFrame

19.24.4. Geometry Use Definitions

Object Geometry in Context

The geometric representation of IfcWindowLining is given by the IfcProductDefinitionShape, allowing multiple geometric representation. Included are:

Local Placement

The Reference Geometry for IfcWindowLining is defined in it's supertype IfcProduct. It is defined by the

- IfcLocalPlacement, which defines the local coordinate system that is referenced by all geometric representations.

Geometric Representation

The standard geometric representation of IfcWindowLining is defined as agreed for window lining by the implementers agreement for IFC Release 1.5.1. Eventual changes for Release 2.0 still needs to be defined.

19.25. Class IfcWindowPanel

19.25.1. Class Semantic Definition

Definition from IAI: A description of the window panel.

Copyright © International Alliance for Interoperability - 1996-1999

History

New Entity in IFC Release 2.0

See AR-1 for requirements for IFC Release 2.0

19.25.2. Attribute and Relationship Definitions

Superclasses and Subclasses

IfcRoot
IfcObject
IfcProduct
IfcElement
IfcBuildingElement
IfcWindowPanel

Attributes and Relationships

	Attribute / Relation	Definition	Data or Rel. Type	Min.	Max.	Default
	PredefinedType	Predefined generic types are specified in an Enum. Type driven Psets are defined for each generic type (as the required attributes differ). The GenericType for a given instance drives determines the type of Pset attached at runtime throug the associated TypeDefinitions relationship (defined at the IfcObject supertype).	IfcWindowPanelTypeEnum	FixedPanel	SwingPanel	FixedPanel
	OperationType	Types of window panel operations. Also used to assign standard symbolic presentations according to national building standards.	IfcWindowPanelOperationEnum	SideHungRightHand	OtherOperation	NotDefined

Formal Propositions

WR1	

19.25.3. Interface Definitions

- I_WindowPanel

19.25.4. Type Definitions

Common PropertySet

Pset_WindowPanelCommon

Type driven PropertySets

PreDefined Type	Associated PropertySet
FixedPanel	Pset_WindowPanelFixed
Sliding	Pset_WindowPanelSliding
Swinging	Pset_WindowPanelSwinging
Pivoting	Pset_WindowPanelPivoting
NotDefined	
UserDefined	

Copyright © International Alliance for Interoperability - 1996-1999

19.25.5. Geometry Use Definitions

Object Geometry in Context

The geometric representation of IfcWindowPanel is given by the IfcProductDefinitionShape, allowing multiple geometric representation.

Included are:

Local Placement

The Reference Geometry for IfcWindowPanel is defined in it's supertype IfcProduct. It is defined by the

- IfcLocalPlacement, which defines the local coordinate system that is referenced by all geometric representations.

Geometric Representation

The standard geometric representation of IfcWindowPanel is defined as agreed for window panels by the implementers agreement for IFC Release 1.5.1. Eventual changes for Release 2.0 still needs to be defined.

19.26. PropertySet Pset_BeamCommon

19.26.1. PropertySet Semantic Definition

Definition from IAI: Properties common to the definition of all IfcBeam.

19.26.2. Attribute and Relationship Definitions

Property Name	Definition	Property Type	Data or Rel. Type	Min.	Max.	Default
Reference	Reference ID for this beam type in this project (e.g. type "B-1")	IfcSimpleProperty	IfcString	n/a	n/a	empty string
Description	Textual description for this type of beam.	IfcSimpleProperty	IfcString	n/a	n/a	empty string
Depth	Specified or derived depth of the beam.	IfcSimpleProperty	IfcPositiveLengthMeasure	0	n/a	1
Width	Specified or derived witdth of the beam.	IfcSimpleProperty	IfcPositiveLengthMeasure	0	n/a	1
Span	Clear span for this beam.	IfcSimpleProperty	IfcPositiveLengthMeasure	0	n/a	1
Camber	Measure that design of beam rises in the center in order to prevent beam sagging under loading and over time.	IfcSimpleProperty	IfcPositiveLengthMeasure	0	n/a	1
SectionModulus	Calculated section modulus for this beam	IfcSimpleProperty	IfcReal	0	see type	0
Slope	Slope for this stringer - relative to horizontal (0.0 degrees).	IfcSimpleProperty	IfcPlaneAngleMeasure	0	see type	0

Copyright © International Alliance for Interoperability - 1996-1999

19.27. PropertySet Pset_BuiltInCommon

19.27.1. PropertySet Semantic Definition

Definition from IAI: Properties common to the definition of all IfcBuiltIn.

19.27.2. Attribute and Relationship Definitions

Property Name	Definition	Property Type	Data or Rel. Type	Min.	Max.	Default
Reference	Reference ID for this built-in type in this project (e.g. type "B-1")	IfcSimpleProperty	IfcString	n/a	n/a	empty string
Description	Textual description for this type of built-in.	IfcSimpleProperty	IfcString	n/a	n/a	n/a

19.28. PropertySet Pset_ColumnCommon

19.28.1. PropertySet Semantic Definition

Definition from IAI: Properties common to the definition of all IfcColumn.

19.28.2. Attribute and Relationship Definitions

Property Name	Definition	Property Type	Data or Rel. Type	Min.	Max.	Default
Reference	Reference ID for this column type in this project (e.g. type "C-1")	IfcSimpleProperty	IfcString	n/a	n/a	empty string
Description	Textual description for this type of column.	IfcSimpleProperty	IfcString	n/a	n/a	empty string
Length	Specified or derived length of the Column.	IfcSimpleProperty	IfcPositiveLengthMeasure	0	n/a	0
Width	Specified or derived witdth of the Column.	IfcSimpleProperty	IfcPositiveLengthMeasure	0	n/a	0
Height	Specified or derived Height of the Column.	IfcSimpleProperty	IfcPositiveLengthMeasure	0	n/a	0
SlendernessRatio	Calculated slenderness ratio for this column	IfcSimpleProperty	IfcReal	0	see type	0

19.29. PropertySet Pset_CoveringCeiling

19.29.1. PropertySet Semantic Definition

Definition from IAI: Properties common to the definition of all types “Ceiling” of IfcCovering.

19.29.2. Attribute and Relationship Definitions

Property Name	Definition	Property Type	Data or Rel. Type	Min.	Max.	Default
CommonCoveringProperties		IfcObjectReference	IfcGloballyUniqueId, Pset_CoveringCommon			

Copyright © International Alliance for Interoperability - 1996-1999

CeilingTileLength	Length of ceiling tiles	IfcSimpleProperty	IfcPositiveLengthMeasure	0	see type	0
CeilingTileWidth	Width of ceiling tiles	IfcSimpleProperty	IfcPositiveLengthMeasure	0	see type	0

19.30. PropertySet Pset_CoveringCladding

19.30.1. PropertySet Semantic Definition

Definition from IAI: Properties common to the definition of all types “Cladding” of IfcCovering.

19.30.2. Attribute and Relationship Definitions

Property Name	Definition	Property Type	Data or Rel. Type	Min.	Max.	Default
CommonCovering Properties		IfcObjectReference	IfcGloballyUniqueId, Pset_CoveringCommon			

19.31. PropertySet Pset_CoveringCommon

19.31.1. PropertySet Semantic Definition

Definition from IAI: Properties common to the definition of all IfcCovering.

19.31.2. Attribute and Relationship Definitions

Property Name	Definition	Property Type	Data or Rel. Type	Min.	Max.	Default
Reference	Reference ID for this ceiling type in this project (e.g. type 'A-1').	IfcSimpleProperty	IfcString	n/a	n/a	empty string
Description	Textual description for this type of ceiling.	IfcSimpleProperty	IfcString	n/a	n/a	empty string
FireRating	Rating indicating the time duration before fire would penetrate this ceiling	IfcSimpleProperty	IfcTimeMeasure	n/a	n/a	0
AcousticRating	Rating indicating the sound transmission resistance of this ceiling	IfcSimpleProperty	IfcReal	n/a	n/a	see type

19.32. PropertySet Pset_CoveringFlooring

19.32.1. PropertySet Semantic Definition

Definition from IAI: Properties common to the definition of all types “Flooring” of IfcCovering.

19.32.2. Attribute and Relationship Definitions

Property Name	Definition	Property Type	Data or Rel. Type	Min.	Max.	Default
CommonCovering Properties		IfcObjectReference	IfcGloballyUniqueId, Pset_CoveringCommon			

Copyright © International Alliance for Interoperability - 1996-1999

19.33. PropertySet Pset_CoveringMillwork

19.33.1. PropertySet Semantic Definition

Definition from IAI: Properties common to the definition of all types “Millwork” of IfcCovering.

19.33.2. Attribute and Relationship Definitions

Property Name	Definition	Property Type	Data or Rel. Type	Min.	Max.	Default
CommonCovering Properties		IfcObjectReference	IfcGloballyUniqueId, Pset_CoveringCommon			

19.34. PropertySet Pset_DoorCommon

19.34.1. PropertySet Semantic Definition

Definition from IAI: Properties common to the definition of all IfcDoor.

19.34.2. Attribute and Relationship Definitions

Property Name	Definition	Property Type	Data or Rel. Type	Min.	Max.	Default
Reference	User defined reference for this door type in this project (e.g. type 'D-1')	IfcSimpleProperty	IfcString	see type	see type	empty string
Description	Specific description for this type of door within this project.	IfcSimpleProperty	IfcString	see type	see type	empty string
NominalHeight	Nominal Door Height as usually specified in the product information (rounded actual height)	IfcSimpleProperty	IfcPositiveLengthMeasure	0	see type	2000
NominalWidth	Nominal Door Width as usually specified in the product information (rounded actual width)	IfcSimpleProperty	IfcPositiveLengthMeasure	0	see type	1000
HardwareGroup	Reference to the hardware group used for this door type. It is implemented as a reference to the simple property list (Pset_HardwareGroup) which defines information about the door hardware.	IfcObjectReference	IfcGloballyUniqueId, Pset_HardwareGroup	n/a	n/a	NIL
Shading	Reference to the shading device information used for this door type. It is implemented as a reference to the simple property list (Pset_OpeningShadingType) which defines information about the shading.	IfcObjectReference	IfcGloballyUniqueId, Pset_OpeningShadingType	n/a	n/a	NIL
IsExterior	Indication whether the door	IfcSimpleProperty	IfcBoolean	FALSE	TRUE	FALSE

Copyright © International Alliance for Interoperability - 1996-1999

	type is designed for use in exterior walls (TRUE) or not (FALSE)					
ParameterTakesPrecedence	Indicates whether the parameter, given by the property type information of the door should take precedence (TRUE) over the standard shape representation using explicit geometry (see geometric use case at IfcDoor), or not (FALSE). Only valid, if the ArbitraryShapeRepresentation property is set to FALSE.	IfcSimpleProperty	IfcBoolean	FALSE	TRUE	FALSE
ArbitraryShapeRepresentation	Indicates whether the shape of the door is defined using the arbitrary shape representation type (see geometric use case at IfcDoor) - (TRUE), or not (FALSE). If TRUE than all parameters given by the property type information of the door, if present, only reflect abbrevations for the convenience of non CAD applications.	IfcSimpleProperty	IfcBoolean	FALSE	TRUE	FALSE
OrientationToExterior	Indicates whether the the orientation of the window to the exterior space is as given by the local x-axis of the placement coordinate system (see geometric use case at IfcWindow) - (TRUE), or should be reversed (FALSE). If TRUE the x-axis points to the exterior, if FALSE the x-axis points to the interior. Only valid for external windows.	IfcSimpleProperty	IfcBoolean	FALSE	TRUE	TRUE
Infiltration	Infiltration flowrate of outside air for the filler object based on the area of the filler object at a pressure level of 50 Pascals. It shall be used, if the length of all joints in unknown. The usual unit (if pressure is taken into consideration) is m3/(hPa2/3). The following translations apply: G: Fugendurchlässigkeit	IfcSimplePropertyWithUnit	IfcReal, InfiltatationUnit			
ThermalTransmittanceCoefficient	Overall thermal transmittance coefficient (U-Value) of the composite materials used by the filler object. It includes	IfcSimplePropertyWithUnit	IfcReal, IfcThermalTransmittanceMeasure			

Copyright © International Alliance for Interoperability - 1996-1999

	internal and external surface coefficient. The usual unit is W/m²K. The following translations apply: G: Gesamtwärmedurchgangskoeffizient					
FireRating	Fire rating of complete door assembly. Given according to the national fire safety classification.	IfcSimpleProperty	IfcString	see type	see type	0
AcousticRating	Rating for acoustic transmisivity (Sound Transference Factor =STF) for the complete door assembly.	IfcSimpleProperty	IfcReal	see type	see type	0
SecurityRating	Index based rating system indicating security level.	IfcSimpleProperty	IfcString	n/a	n/a	empty string

19.35. PropertySet Pset_DoorLiningCommon

19.35.1. PropertySet Semantic Definition

Definition from IAI: Properties common to the definition of all IfcDoorLining.

19.35.2. Attribute and Relationship Definitions

Property Name	Definition	Property Type	Data or Rel. Type	Min.	Max.	Default
LiningDepth	Depth (dimension in plane perpendicular to door leaf) of the door lining.	IfcSimpleProperty	IfcPositiveLengthMeasure	0	n/a	NIL
LiningThickness	Thickness (width in plane parallel to door leaf) of the door lining.	IfcSimpleProperty	IfcPositiveLengthMeasure	0	n/a	NIL
ThresholdDepth	Depth (dimension in plane perpendicular to door leaf) of the door threshold. Only given, if door lining includes threshold and parameter is known.	IfcSimpleProperty	IfcPositiveLengthMeasure	0	n/a	NIL
ThresholdThickness	Thickness (width in plane parallel to door leaf) of the door threshold. Only given, if door lining includes threshold and parameter is known.	IfcSimpleProperty	IfcPositiveLengthMeasure	0	n/a	NIL

19.36. PropertySet Pset_DoorPanelCommon

19.36.1. PropertySet Semantic Definition

Definition from IAI: Properties common to the definition of all IfcDoorPanel.

Copyright © International Alliance for Interoperability - 1996-1999

19.36.2. Attribute and Relationship Definitions

Property Name	Definition	Property Type	Data or Rel. Type	Min.	Max.	Default
PanelThickness	Thickness of the door panel.	IfcSimpleProperty	IfcPositiveLengthMeasure	0	see type	50
PanelToLiningOffset	Offset of the inner panel face from the inner lining face (measured along the x-axis of the placement co-ordinate system).	IfcSimpleProperty	IfcLengthMeasure	0	see type	0
PanelHeight	Overall height of this panel. Should be included for convinience use by applications that cannot derive this from the geometric representation.	IfcSimpleProperty	IfcPositiveLengthMeasure	0	see type	1800
PanelWidth	Overall width of this panel. Should be included for convinience use by applications that cannot derive this from the geometric representation.	IfcSimpleProperty	IfcPositiveLengthMeasure	0	see type	900
CrackLenght	Length of the joints of this door panel (usually the perimeter of the panel) that have to be considered for natural ventilation and heat losses.	IfcSimpleProperty	IfcPositiveLengthMeasure	0	see type	NIL
InfiltrationCoefficient	Infiltration Coefficient per length unit of joints. Used in conjunction with the LenghtOfJoints property in Pset_WindowPanel or Pset_DoorPanel.. The usual unit (if pressure is taken into consideration) is m3/(mhPa2/3). The following translations apply: G: Fugendurchlaßkoeffizient, J: JYOINTO BUBUN NO KUUKI TOUKARITU	IfcSimplePropertyWithUnit	IfcReal, InfiltatationUnit			
StandardPanelType	Description of the standard operating type of the panel, according to the national classification system.	IfcSimpleProperty	IfcString	see type	see type	empty string
PanelHasOpenings	Indication whether the door panel has openings (TRUE) or not (FALSE). Only solid panels are supported by the advanced geometric representation using geometry parameters given by the property set (see property ParameterTakesPrecedence).	IfcSimpleProperty	IfcBoolean	FALSE	TRUE	FALSE
GlazingAreaFraction	Fraction of the glazing area relative to the total area of	IfcSimpleProperty	IfcPositiveRatioMeasure	see type	see type	1

Copyright © International Alliance for Interoperability - 1996-1999

	the filling element. It shall be used, if the glazing area is not given in the Pset_DoorWinPanelOpening as OpeningArea. The following translations apply: G: Glasflächenanteil, J: MADO MENSEKI HIRITU					
Glazing	Reference to the property set for the glazing, given as reference to the 'nested' property set (Pset_GlazingType).	IfcPropertyList	IfcObjectReference, IfcGloballyUniqueId, Pset_GlazingType	n/a	n/a	n/a
Finish	Finish selection for this panel	IfcSimpleProperty	IfcString	see type	see type	empty string
Color	Color selection for this panel	IfcSimpleProperty	IfcString	see type	see type	empty string

19.37. PropertySet Pset_DoorPanelRevolving

19.37.1. PropertySet Semantic Definition

Definition from IAI: Properties common to the definition of all types “Revolving” of IfcDoorPanel.

19.37.2. Attribute and Relationship Definitions

Property Name	Definition	Property Type	Data or Rel. Type	Min.	Max.	Default
CommonDoorPanel Properties		IfcObjectReference	IfcGloballyUniqueId, Pset_DoorPanelCommon			

19.38. PropertySet Pset_DoorPanelRollingup

19.38.1. PropertySet Semantic Definition

Definition from IAI: Properties common to the definition of all types “Rollingup” of IfcDoorPanel.

19.38.2. Attribute and Relationship Definitions

Property Name	Definition	Property Type	Data or Rel. Type	Min.	Max.	Default
CommonDoorPanel Properties		IfcObjectReference	IfcGloballyUniqueId, Pset_DoorPanelCommon			

19.39. PropertySet Pset_DoorPanelSliding

19.39.1. PropertySet Semantic Definition

Definition from IAI: Properties common to the definition of all types “Sliding” of IfcDoorPanel.

Copyright © International Alliance for Interoperability - 1996-1999

19.39.2. Attribute and Relationship Definitions

Property Name	Definition	Property Type	Data or Rel. Type	Min.	Max.	Default
CommonDoorPanelProperties		IfcObjectReference	IfcGloballyUniqueId, Pset_DoorPanelCommon			

19.40. PropertySet Pset_DoorPanelSwinging

19.40.1. PropertySet Semantic Definition

Definition from IAI: Properties common to the definition of all types “Swinging” of IfcDoorPanel.

19.40.2. Attribute and Relationship Definitions

Property Name	Definition	Property Type	Data or Rel. Type	Min.	Max.	Default
CommonDoorPanelProperties		IfcObjectReference	IfcGloballyUniqueId, Pset_DoorPanelCommon			
LeftNotRightSwing	Indication whether the door panel swings left hand (TRUE) or right hand (FALSE).	IfcSimpleProperty	IfcBoolean	FALSE	TRUE	FALSE
SwingStartAngle	As viewed in the 'XY' plane of the Door's LCS, where zero angle is aligned to the positive 'Y' axis.	IfcSimpleProperty	IfcPlaneAngleMeasure	-360	360	0
IncludedSwingAngle	Measure of arc the panel is designed to swing. Note that positive angle denotes counterclockwise arc, negative angle denotes clockwise arc.	IfcSimpleProperty	IfcPlaneAngleMeasure	-360	360	-90

19.41. PropertySet Pset_GlazingType

19.41.1. PropertySet Semantic Definition

Definition from IAI: Properties common to the definition of all glazing as referred to by other property sets.

19.41.2. Attribute and Relationship Definitions

Property Name	Definition	Property Type	Data or Rel. Type	Min.	Max.	Default
NumberOfGlasses	Number of glass layers within the frame. E.g. "2" for double glazing.	IfcSimpleProperty	IfcCountMeasure	see type	see type	2
Thickness	Thickness of the glass.	IfcSimpleProperty	IfcPositiveLengthMeasure	see type	see type	4
FillGas	Name of the gas by which the gap between two glass layers is filled.	IfcSimpleProperty	IfcString	see type	see type	n/a
Color	Color (tint) selection for this glazing.	IfcSimpleProperty	IfcString	see type	see type	n/a
IsTempered	Indication whether the glass is	IfcSimpleProperty	IfcBoolean	FALSE	TRUE	FALSE

Copyright © International Alliance for Interoperability - 1996-1999

	tempered (TRUE) or not (FALSE)					
IsLaminated	Indication whether the glass is layered with other materials (TRUE) or not (FALSE).	IfcSimpleProperty	IfcBoolean	FALSE	TRUE	FALSE
IsCoated	Indication whether the glass is coated with a material (TRUE) or not (FALSE).	IfcSimpleProperty	IfcBoolean	FALSE	TRUE	FALSE
IsWired	Indication whether the glass includes a contained wire mesh to prevent break-in (TRUE) or not (FALSE)	IfcSimpleProperty	IfcBoolean	FALSE	TRUE	FALSE
ImpactResistance	Description of the resistance to shatter. Either given by description or by a numeric value of a scale (1..10) accoridng to regional classifications.	IfcSimpleProperty	IfcString	see type	see type	n/a
Translucency	Fraction of the visible light that passes the glazing at normal incidence. It is a value without unit.	IfcSimpleProperty	IfcPositiveRatioMeasure	see type	see type	1
Reflectivity	Fraction of the visible light that is reflected by the glazing at normal incidence. It is a value without unit.	IfcSimpleProperty	IfcPositiveRatioMeasure	see type	see type	0
BeamRadiationTransmittance	Direct solar radiation tarnsmittance that passes the glazing at normal incidence. It is a value without unit, often refered to as (Tsol).	IfcSimpleProperty	IfcPositiveRatioMeasure	see type	see type	0
SolarHeatGain	Total solar heat transmittance that passes the glazing at normal incidence. It is a value without unit, often refered to as (SHGC):	IfcSimpleProperty	IfcPositiveRatioMeasure	see type	see type	0
ThermalTransmittanceSummerShaded	Summer shaded thermal transmittance coefficient, often refered to as (U-value)	IfcSimplePropertyWithUnit	IfcReal, IfcThermalTransmittanceMeasure			
ThermalTransmittanceSummerUnshaded	Summer unshaded thermal transmittance coefficient, often refered to as (U-value)	IfcSimplePropertyWithUnit	IfcReal,IfcThermalTransmittanceMeasure			
ThermalTransmittanceWinter	Winter thermal transmittance coefficient, often refered to as (U-value)	IfcSimplePropertyWithUnit	IfcReal,IfcThermalTransmittanceMeasure			

19.42. PropertySet Pset_HardwareGroup

19.42.1. PropertySet Semantic Definition

Definition from IAI: Properties common to the definition of all hardware groups as referred to by other property sets.

Copyright © International Alliance for Interoperability - 1996-1999

19.42.2. Attribute and Relationship Definitions

Property Name	Definition	Property Type	Data or Rel. Type	Min.	Max.	Default
Reference	User defined reference for this standard collection of hardware elements within this project.	IfcSimpleProperty	IfcString	see type	see type	empty string
Description	Specific description for this type of hardware within this project.	IfcSimpleProperty	IfcString	see type	see type	empty string
Manufacturer	The organization that manufactured or assembled the item.	IfcObjectReference	IfcOrganization	n/a	n/a	n/a
ModelLabel	The model number and/or unit designator assigned by the manufacturer of the manufactured item.	IfcSimpleProperty	IfcString	see type	see type	empty string
ModelDescription	A physical description of the manufactured item as provided by the manufacturer of the munufactured item.	IfcSimpleProperty	IfcString	see type	see type	empty string
Finish	Finish applied to hardware	IfcSimpleProperty	IfcString	see type	see type	empty string

19.43. PropertySet Pset_OpeningShadingType

19.43.1. PropertySet Semantic Definition

Definition from IAI*:* Properties common to the definition of all shading types as referred to by other property sets

The following figure shall define the interpretation of overhang measures for Pset_OpeningShadingType.

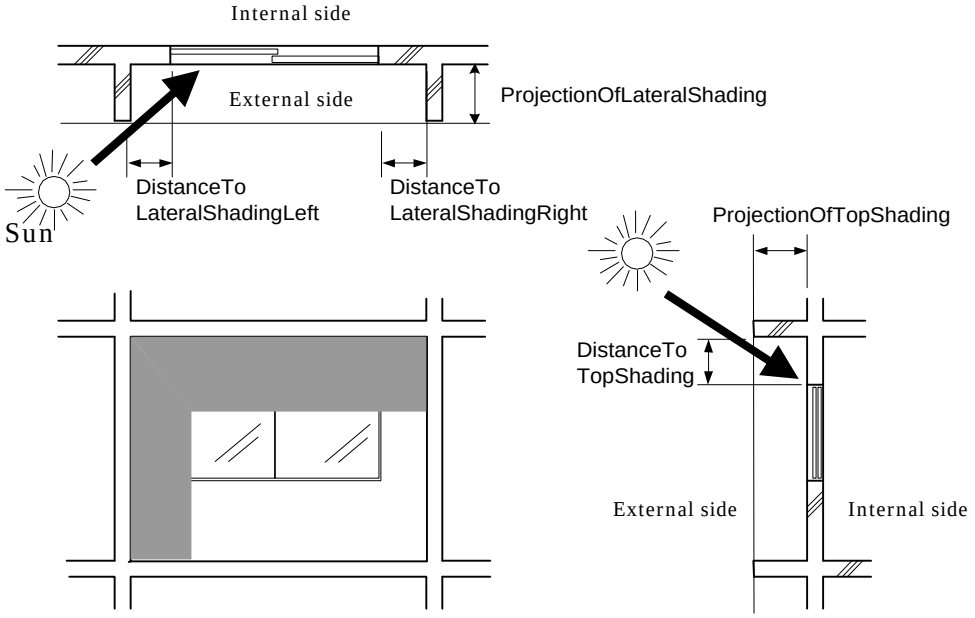

The following figure shall define the interpretation of shading types for Pset_OpeningShadingType.

Copyright © International Alliance for Interoperability - 1996-1999

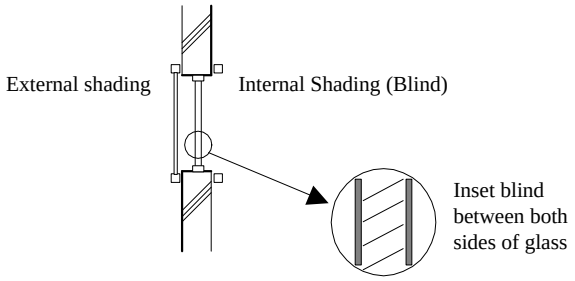

19.43.2. Attribute and Relationship Definitions

Property Name	Definition	Property Type	Data or Rel. Type	Min.	Max.	Default
ExternalShadingCoefficient	radiation transmission coefficient of the outside shading device. It is a value without unit. The following translations apply: G: Durchlaßfaktor Sonnenschutz außen, JA: GAIBU SHAHEI-KEISU	IfcSimpleProperty	IfcPositiveRatioMeasure	see type	see type	see type
InternalShadingCoefficient	radiation transmission coefficient of the inside shading device, symbol "b-value". It is a value without unit. The following translations apply: G: Durchlaßfaktor Sonnenschutz innen, JA: NAIBU SHAHEI-KEISU	IfcSimpleProperty	IfcPositiveRatioMeasure	see type	see type	see type
InsetShadingCoefficient	radiation transmission coefficient of the shading device inside the glazing, symbol "b-value". It is a value without unit. The following translations apply: G: Durchlaßfaktor Sonnenschutz innerhalb der Verglasung, JA: KUMIKOMI SHAHEI-KEISU	IfcSimpleProperty	IfcPositiveRatioMeasure	see type	see type	see type
DistanceToLateralShadingLeft	Distance between the lateral shading device and the window or door opening as shown in the figure.	IfcSimpleProperty	IfcPositiveLengthMeasure	see type	see type	see type
DistanceToLateralShadingRight	Distance between the lateral shading device and the window or door opening as shown in the figure.	IfcSimpleProperty	IfcPositiveLengthMeasure	see type	see type	see type
ProjectionOfLateralShading	Projection of the lateral shading device from the facade (outer surface of the building element, in which the door or window is located)	IfcSimpleProperty	IfcPositiveLengthMeasure	see type	see type	see type
DistanceToTopShading	Distance between the shading device on top and the window or door opening as shown in the figure.	IfcSimpleProperty	IfcPositiveLengthMeasure	see type	see type	see type
ProjectionOfTopSh	Projection of the shading	IfcSimpleProperty	IfcPositiveLengthMeasure	see type	see type	see type

Copyright © International Alliance for Interoperability - 1996-1999

ading	device on the top from the facade (outer surface of the building element, in which the door or window is located)					

19.44. PropertySet Pset_PermeableCoveringCommon

19.44.1. PropertySet Semantic Definition

Definition from IAI: Properties common to the definition of all IfcPermeableCovering.

19.44.2. Attribute and Relationship Definitions

Property Name	Definition	Property Type	Data or Rel. Type	Min.	Max.	Default
RequiredOpening Height	Overall Height of the required opening for this louver. Note this can be derived from the 'ProductShape' and is included for convenience use by applications that cannot derive this from the shape.	IfcSimpleProperty	IfcPositiveLengthMeasure	0	see type	0
RequiredOpening Width	Overall Width of the required opening for this louver. Note this can be derived from the 'ProductShape' and is included for convenience use by applications that cannot derive this from the shape.	IfcSimpleProperty	IfcPositiveLengthMeasure	0	see type	0
FrameWidth	Average length measure, when viewed from the finished face, from the edge of the louver to fins.	IfcSimpleProperty	IfcPositiveLengthMeasure	see type	see type	1
FrameDepth	Measure of the frame depth (front to back)	IfcSimpleProperty	IfcPositiveLengthMeasure	see type	see type	1
Orientation	Orientation angle, when facing the finished side of installed louvers. Horzontal is taken to be zero ("0") angle. Angle is positive in counter-clockwise rotation.	IfcSimpleProperty	IfcPlaneAngleMeasure	0	<360.0	0
FreeAreaVentilatio n	Actual usable Area.	IfcSimpleProperty	IfcAreaMeasure	0	see type	0
ClearanceSpace	Distance needed for correct operation/air flow	IfcSimpleProperty	IfcPositiveLengthMeasure	see type	see type	NIL
Operable	Designation of operability of this cover	IfcSimpleProperty	IfcBoolean	FALSE	TRUE	FALSE

19.45. PropertySet Pset_PermeableCoveringGrill

19.45.1. PropertySet Semantic Definition

Definition from IAI: Properties common to the definition of all types “Grill” of all IfcPermeableCovering.

Copyright © International Alliance for Interoperability - 1996-1999

19.45.2. Attribute and Relationship Definitions

Property Name	Definition	Property Type	Data or Rel. Type	Min.	Max.	Default
CommonPermeableCoveringProperties		IfcObjectReference	IfcGloballyUniqueId, Pset_PermeableCoveringCommon			
HorizontalSpacing	Spacing of the screening wire at the angle set by Orientation.	IfcSimpleProperty	IfcPositiveLengthMeasure	see type	see type	0
VerticalSpacing	Spacing of the screening wire at the angle perpendicular to that set by Orientation.	IfcSimpleProperty	IfcPositiveLengthMeasure	see type	see type	0
FinWidth	Width (when viewed from finished side) of the fins in this grill.	IfcSimpleProperty	IfcPositiveLengthMeasure	see type	see type	0
FinDepth	Depth (finished side to back side) of the fins in this grill.	IfcSimpleProperty	IfcPositiveLengthMeasure	see type	see type	0

19.46. PropertySet Pset_PermeableCoveringLouver

19.46.1. PropertySet Semantic Definition

Definition from IAI: Properties common to the definition of all types “Louver” of all IfcPermeableCovering.

19.46.2. Attribute and Relationship Definitions

Property Name	Definition	Property Type	Data or Rel. Type	Min.	Max.	Default
CommonPermeableCoveringProperties		IfcObjectReference	IfcGloballyUniqueId, Pset_PermeableCoveringCommon			
FinSpacing	Distance between adjacent fins.	IfcSimpleProperty	IfcPositiveLengthMeasure	see type	see type	0
FinAngle	Slope angle of the fins, in cross-sectional view with finished (or exterior) face on the right side of the section. Horizontal fin angle is taken to be zero ("0") angle.	IfcSimpleProperty	IfcPlaneAngleMeasure	0	<360.0	0
FinDepth	Fin depth measure, in cross-sectional view.	IfcSimpleProperty	IfcPositiveLengthMeasure	see type	see type	0

19.47. PropertySet Pset_PermeableCoveringScreen

19.47.1. PropertySet Semantic Definition

Definition from IAI: Properties common to the definition of all types “Screen” of all IfcPermeableCovering.

19.47.2. Attribute and Relationship Definitions

Property Name	Definition	Property Type	Data or Rel. Type	Min.	Max.	Default
CommonPermeable		IfcObjectReference	IfcGloballyUniqueId,			

Copyright © International Alliance for Interoperability - 1996-1999

CoveringProperties			Pset_PermeableCoveringCommon			
HorizontalSpacing	Spacing of the screening wire at the angle set by Orientation.	IfcSimpleProperty	IfcPositiveLengthMeasure	see type	see type	0
VerticalSpacing	Spacing of the screening wire at the angle perpendicular to that set by Orientation.	IfcSimpleProperty	IfcPositiveLengthMeasure	see type	see type	0
ScreenThickness	Thickness of the screening wire	IfcSimpleProperty	IfcPositiveLengthMeasure	see type	see type	1

19.48. PropertySet Pset_RoofCommon

19.48.1. PropertySet Semantic Definition

Definition from IAI: Properties common to the definition of all IfcRoof.

19.48.2. Attribute and Relationship Definitions

Property Name	Definition	Property Type	Data or Rel. Type	Min.	Max.	Default
Reference	Reference ID for this roof type in this project (e.g. type 'A-1')	IfcSimpleProperty	IfcString	n/a	n/a	empty string
Description	Textual description for this roof type	IfcSimpleProperty	IfcString	n/a	n/a	empty string
FireRating	Time duration for fire resistence the roof assembly is rated	IfcSimpleProperty	IfcTimeMeasure	n/a	n/a	0

19.49. PropertySet Pset_SlabCommon

19.49.1. PropertySet Semantic Definition

Definition from IAI: Properties common to the definition of all IfcSlab.

19.49.2. Attribute and Relationship Definitions

Property Name	Definition	Property Type	Data or Rel. Type	Min.	Max.	Default
Reference	Reference ID for this slab type in this project (e.g. type 'A-1')	IfcSimpleProperty	IfcString	n/a	n/a	empty string
Description	Textual description for this floor type.	IfcSimpleProperty	IfcString	n/a	n/a	empty string
FireRating	Fire rating of slab.	IfcSimpleProperty	IfcTimeMeasure	n/a	n/a	0
ThermalRating	Rating for thermal transmisivity ('U' value).	IfcSimpleProperty	IfcReal	n/a	n/a	0
AcousticRating	Rating for sound protection (Sound Transference Factor =STF).	IfcSimpleProperty	IfcReal	n/a	n/a	0

Copyright © International Alliance for Interoperability - 1996-1999

19.50. PropertySet Pset_SlabFloor

19.50.1. PropertySet Semantic Definition

Definition from IAI: Properties common to the definition of all types “Roof” of all IfcSlab.

19.50.2. Attribute and Relationship Definitions

Property Name	Definition	Property Type	Data or Rel. Type	Min.	Max.	Default
CommonSlabProperties		IfcObjectReference	IfcGloballyUniqueId, Pset_SlabCommon			

19.51. PropertySet Pset_SlabRoof

19.51.1. PropertySet Semantic Definition

Definition from IAI: Properties common to the definition of all types “Roof” of all IfcSlab.

19.51.2. Attribute and Relationship Definitions

Property Name	Definition	Property Type	Data or Rel. Type	Min.	Max.	Default
CommonSlabProperties		IfcObjectReference	IfcGloballyUniqueId, Pset_SlabCommon			
RequiredSlope	Sloping angle of the roof slab as required by either building regulations or roofing material.	IfcSimpleProperty	IfcPlaneAngleMeasure	see type	see type	empty string

19.52. PropertySet Pset_WallCommon

19.52.1. PropertySet Semantic Definition

Definition from IAI: Properties common to the definition of all IfcWall.

19.52.2. Attribute and Relationship Definitions

Property Name	Definition	Property Type	Data or Rel. Type	Min.	Max.	Default
Reference	Reference ID for this wall type in this project (e.g. type 'A-1')	IfcSimpleProperty	IfcString	n/a	n/a	empty string
Description	Textual description for this wall type.	IfcSimpleProperty	IfcString	n/a	n/a	empty string
ExtendToStructure	Does the Wall extend to the structure above	IfcSimpleProperty	IfcBoolean	FALSE	TRUE	FALSE
ExternalWall	Boolean value indicating if this wall is exterior	IfcSimpleProperty	IfcBoolean	FALSE	TRUE	TRUE
FireRating	Fire rating of wall assembly.	IfcSimpleProperty	IfcTimeMeasure	n/a	n/a	0
ThermalRating	Rating for thermal transmisivity ('U' value).	IfcSimpleProperty	IfcReal	n/a	n/a	0
AcousticRating	Rating for sound protection	IfcSimpleProperty	IfcReal	n/a	n/a	0

Copyright © International Alliance for Interoperability - 1996-1999

	(Sound Transference Factor =STF) for wall assembly.					

19.53. PropertySet Pset_WindowCommon

19.53.1. PropertySet Semantic Definition

Definition from IAI: Properties common to the definition of all IfcWindow.

19.53.2. Attribute and Relationship Definitions

Property Name	Definition	Property Type	Data or Rel. Type	Min.	Max.	Default
Reference	User defined reference for this window type in this project (e.g. type "W-1")	IfcSimpleProperty	IfcString	see type	see type	empty string
Description	Specific description for this type of window within this project.	IfcSimpleProperty	IfcString	see type	see type	empty string
NominalHeight	Nominal window height as usually specified in the product information (often: rounded actual height)	IfcSimpleProperty	IfcPositiveLengthMeasure	0	see type	2000
NominalWidth	Nominal window width as usually specified in the product information (often: rounded actual width)	IfcSimpleProperty	IfcPositiveLengthMeasure	0	see type	1000
HardwareGroup	Reference to the hardware group used for this door type. It is implemented as a reference to the simple property list (Pset_HardwareGroup) which defines information about the window hardware.	IfcObjectReference	IfcGloballyUniqueId, Pset_HardwareGroup	n/a	n/a	NIL
Shading	Reference to the shading device information used for this door type. It is implemented as a reference to the simple property list (Pset_OpeningShadingType) which defines information about the shading.	IfcObjectReference	IfcGloballyUniqueId, Pset_OpeningShadingType	n/a	n/a	NIL
IsExterior	Window is an exterior window (TRUE) or interior window (FALSE)	IfcSimpleProperty	IfcBoolean	FALSE	TRUE	TRUE
ParameterTakesPrecedence	Indicates whether the parameter, given by the property type information of the window should take precedence (TRUE) over the standard shape representation using explicit geometry (see geometric use case at IfcWindow), or not	IfcSimpleProperty	IfcBoolean	FALSE	TRUE	FALSE

Copyright © International Alliance for Interoperability - 1996-1999

	(FALSE). Only valid, if the ArbitraryShapeRepresentation property is set to FALSE.					
ArbitraryShapeRepresentation	Indicates whether the shape of the window is defined using the arbitrary shape representation type (see geometric use case at IfcWindow) - (TRUE), or not (FALSE). If TRUE than all parameters given by the property type information of the window, if present, only reflect abbrevations for the convenience of non CAD applications.	IfcSimpleProperty	IfcBoolean	FALSE	TRUE	FALSE
OrientationToExterior	Indicates whether the the orientation of the window to the exterior space is as given by the local x-axis of the placement coordinate system (see geometric use case at IfcWindow) - (TRUE), or should be reversed (FALSE). If TRUE the x-axis points to the exterior, if FALSE the x-axis points to the interior. Only valid for external windows.	IfcSimpleProperty	IfcBoolean	FALSE	TRUE	TRUE
Infiltration	Infiltration flowrate of outside air for the filler object based on the area of the filler object at a pressure level of 50 Pascals. It shall be used, if the length of all joints in unknown. The usual unit (if pressure is taken into consideration) is m3/(hPa2/3). The following translations apply: G: Fugendurchlässigkeit	IfcSimplePropertyWithUnit	IfcReal, InfiltatationUnit			
ThermalTransmittanceCoefficient	Overall thermal transmittance coefficient (U-Value) of the composite materials used by the filler object. It includes internal and external surface coefficient. The usual unit is W/m²K. The following translations apply: G: Gesamtwärmedurchgangskoeffizient	IfcSimplePropertyWithUnit	IfcReal, IfcThermalTransmittanceMeasure			
FireRating	Fire rating of complete window assembly. Given according to the national fire safety classification.	IfcSimpleProperty	IfcString	see type	see type	
AcousticRating	Rating for acoustic transmisivity (Sound	IfcSimpleProperty	IfcReal	see type	see type	0

Copyright © International Alliance for Interoperability - 1996-1999

	Transference Factor =STF) for the complete window assembly.					
SecurityRating	Index based rating system indicating security level.	IfcSimpleProperty	IfcString	n/a	n/a	empty string

19.54. PropertySet Pset_WindowLiningCommon

19.54.1. PropertySet Semantic Definition

Definition from IAI: Properties common to the definition of all IfcWindowLining.

19.54.2. Attribute and Relationship Definitions

Property Name	Definition	Property Type	Data or Rel. Type	Min.	Max.	Default
calcLiningDepth	Depth (dimension in plane perpendicular to door leaf) of the window lining.	IfcSimpleProperty	IfcPositiveLengthMeasure	0	n/a	NIL
calcLiningThickness	Thickness (width in plane parallel to door leaf) of the window lining.	IfcSimpleProperty	IfcPositiveLengthMeasure	0	n/a	NIL

19.55. PropertySet Pset_WindowPanelCommon

19.55.1. PropertySet Semantic Definition

Definition from IAI: Properties common to the definition of all IfcWindowPanel.

19.55.2. Attribute and Relationship Definitions

Property Name	Definition	Property Type	Data or Rel. Type	Min.	Max.	Default
FrameWidth	Width of panel frame, measured from inside of panel (at glazing) to outside of panel (at lining)	IfcSimpleProperty	IfcPositiveLengthMeasure	0	see type	70
FrameDepth	Depth of panel frame, measured from front face to back face horizontally.	IfcSimpleProperty	IfcPositiveLengthMeasure	0	see type	35
FrameToLiningOffset	Offset measured horizontally (perpendicular to the panel and glazing plane) between the inner surface of the frame and the inner surface of the lining.	IfcSimpleProperty	IfcLengthMeasure	0	see type	0
PanelHeight	Overall height of this panel. Should be included for convinience use by applications that cannot derive this from the geometric representation.	IfcSimpleProperty	IfcPositiveLengthMeasure	0	see type	1800

Copyright © International Alliance for Interoperability - 1996-1999

PanelWidth	Overall width of this panel. Should be included for convinience use by applications that cannot derive this from the geometric representation.	IfcSimpleProperty	IfcPositiveLengthMeasure	0	see type	900
StileDepth	Depth (dimension in plane perpendicular to glazing) of the stiles dividing any glass panes	IfcSimpleProperty	IfcPositiveLengthMeasure	0	see type	NIL
StileThickness	Thickness (width in plane parallel to glazing) of the stiles dividing any glass panes	IfcSimpleProperty	IfcPositiveLengthMeasure	0	see type	NIL
CrackLenght	Length of the joints of this window panel (usually the perimeter of the panel) that have to be considered for natural ventilation and heat losses.	IfcSimpleProperty	IfcPositiveLengthMeasure	0	see type	NIL
InfiltrationCoefficient	Infiltration Coefficient per length unit of joints. Used in conjunction with the LenghtOfJoints property in Pset_WindowPanel or Pset_DoorPanel.. The usual unit (if pressure is taken into consideration) is m3/(mhPa2/3). The following translations apply: G: Fugendurchlaßkoeffizient, J: JYOINTO BUBUN NO KUUKI TOUKARITU	IfcSimplePropertyWithUnit	IfcReal, InfiltatationUnit			
GlazingAreaFraction	Fraction of the glazing area relative to the total area of the filling element. It shall be used, if the glazing area is not given in the Pset_DoorWinPanelOpening as OpeningArea. The following translations apply: G: Glasflächenanteil, J: MADO MENSEKI HIRITU	IfcSimpleProperty	IfcPositiveRatioMeasure	see type	see type	1
StandardPanelType	Description of the standard operating type of the panel, according to the national classification system.	IfcSimpleProperty	IfcString	n/a	n/a	n/a
Glazing	Reference to the property set for the glazing, given as reference to the 'nested' property set (Pset_GlazingType).	IfcSimpleProperty	Pset_GlazingType	n/a	n/a	n/a

Copyright © International Alliance for Interoperability - 1996-1999

19.56. PropertySet Pset_WindowPanelFixed

19.56.1. PropertySet Semantic Definition

Definition from IAI: Properties common to the definition of all types “Fixed” of all IfcWindowPanel.

19.56.2. Attribute and Relationship Definitions

Property Name	Definition	Property Type	Data or Rel. Type	Min.	Max.	Default
CommonWindowPanelProperties		IfcObjectReference	IfcGloballyUniqueId, Pset_WindowPanelCommon			

19.57. PropertySet Pset_WindowPanelPivoting

19.57.1. PropertySet Semantic Definition

Definition from IAI: Properties common to the definition of all types “Pivoting” of all IfcWindowPanel.

19.57.2. Attribute and Relationship Definitions

Property Name	Definition	Property Type	Data or Rel. Type	Min.	Max.	Default
CommonWindowPanelProperties		IfcObjectReference	IfcGloballyUniqueId, Pset_WindowPanelCommon			
PivotsVertically	Boolean indicating if the window panel pivots vertically (rotation axis in the middle of width)	IfcSimpleProperty	IfcBoolean	FALSE	TRUE	TRUE
PivotsHorizontally	Boolean indicating if the window panel pivots horizontally (rotation axis in the middle of height). If both, PivotsVertically and PivotsHorizontally, is set to TRUE, then the window pivots in both directions.	IfcSimpleProperty	IfcBoolean	FALSE	TRUE	FALSE

19.58. PropertySet Pset_WindowPanelSliding

19.58.1. PropertySet Semantic Definition

Definition from IAI: Properties common to the definition of all types “Sliding” of all IfcWindowPanel.

19.58.2. Attribute and Relationship Definitions

Property Name	Definition	Property Type	Data or Rel. Type	Min.	Max.	Default
CommonWindowPanelProperties		IfcObjectReference	IfcGloballyUniqueId, Pset_WindowPanelCommon			
PanelFixed	Boolean indicating if the panel is fixed (TRUE), or slides (FALSE).	IfcSimpleProperty	IfcBoolean	FALSE	TRUE	FALSE

Copyright © International Alliance for Interoperability - 1996-1999

HorizontalNotVerticalSliding	Boolean indicating if the panel slides horizontally (TRUE), or slides vertically (is in double hung) (FALSE).	IfcSimpleProperty	IfcBoolean	FALSE	TRUE	FALSE
CounterBalanced	Boolean value indicating if the window hardware includes counter balancing weights for lower panel. Applies only if HorizontalNotVerticalSliding is set to FALSE.	IfcSimpleProperty	IfcBoolean	FALSE	TRUE	FALSE

19.59. PropertySet Pset_WindowPanelSwinging

19.59.1. PropertySet Semantic Definition

Definition from IAI: Properties common to the definition of all types “Swinging” of all IfcWindowPanel.

19.59.2. Attribute and Relationship Definitions

Property Name	Definition	Property Type	Data or Rel. Type	Min.	Max.	Default
CommonWindowPanelProperties		IfcObjectReference	IfcGloballyUniqueId, Pset_WindowPanelCommon			
LeftNotRightHinged	Boolean indicating if the panel has its hing at the left side (TRUE) or at the right side (FALSE).	IfcSimpleProperty	IfcBoolean	FALSE	TRUE	TRUE
PanelSwingAngle	Measure of arc the panel is designed to swing. Note: "0" is taken to be when the window panel is closed.	IfcSimpleProperty	IfcPlaneAngleMeasure	0	<180.0	90

20. IfcSharedBldgServiceElements

The IfcSharedBldgServiceElements schema in the interoperability layer defines basic object concepts required for interoperability between Building Service domain extensions (notably HVAC) and other domain extensions defined in the current IFC model. This schema includes concepts such as Equipment, Fixture, and Electrical Appliance.

The following items have been removed or renamed in this schema for this release of the IFC model from earlier IFC model releases:

- IfcDiscreteElementTypeEnum: This enumeration was originally provided as an empty stub in R1.5 so that it could be expanded in R2.0. This enumeration has been removed in R2.0 because the IfcDistributionElement class has been subtyped and is no longer a type-driven leaf-node in the object model.
- IfcEquipment: This class has been split into two classes: IfcEquipment and IfcFlowEquipment to accommodate equipment participating in a distribution system.
- IfcFixtureTypeEnum: This enumeration was originally provided in IFC R1.0 to elaborate two generic types of fixtures: electrical and plumbing. This enumeration has been removed in R2.0 because the IfcFixture class has been divided into two classes called IfcElectricalFixture and IfcPlumbingFixture, each of which has their own enumerations defining type (IfcElectricalFixtureTypeEnum and IfcPlumbingFixtureTypeEnum).
- IfcFixture: This class has been removed in IFC R2.0 with its contents divided into two classes called IfcElectricalFixture and IfcPlumbingFixture.

Copyright © International Alliance for Interoperability - 1996-1999

20.1. Type IfcDiscreteElementTypeEnum

20.1.1. Type Semantic Definition

Definition from IAI: This enumeration defines the different types of discrete elements an IfcDiscreteElement object can fulfill.

History

This Enumeration has changed after IFC Release 1.5.1, please see the Migration Guide for details

20.1.2. PreDefined Type

This enumeration defines the available PreDefined Types for IfcDiscreteElement

20.1.3. Enumeration

Insulation	Materials with low heat conductance
UserDefined	
NotDefined	

20.2. Type IfcDistributionFlowElementTypeEnum

20.2.1. Type Semantic Definition

Definition from IAI: This enumeration defines the different types of discrete elements an IfcDistributionFlowElement object can fulfill.

History

New Enumeration in IFC Release 2.0

20.2.2. Enumeration

FluidFlow
UserDefined
NotDefined

20.3. Type IfcDistributionPortTypeEnum

20.3.1. Type Semantic Definition

Definition from IAI: This enumeration defines the different types of discrete elements an IfcDistributionPort object can fulfill.

History

New Enumeration in IFC Release 2.0

Copyright © International Alliance for Interoperability - 1996-1999

20.3.2. PreDefined Type

This enumeration defines the available PreDefined Types for IfcDistributionPortGeometry

20.3.3. Enumeration

RoundDuctPort	Properties of a round duct connection.
RectangularDuctPort	Properties of a rectangular duct connection.
OvalDuctPort	Properties of an oval duct connection.
RoundPipePort	Properties of a round pipe connection.
UserDefined	
NotDefined	

20.4. Type IfcElectricalApplianceTypeEnum

20.4.1. Type Semantic Definition

Definition from IAI: This enumeration defines the different types of Electrical Appliances an IfcElectricalAppliance object can fulfill.

History

This Enumeration has changed after IFC Release 1.5.1, please see the Migration Guide for details

20.4.2. PreDefined Type

This enumeration defines the available PreDefined Types for IfcElectricalAppliance

20.4.3. Enumeration

Computer	Computer Electrical Appliance Type
Copier	Copier Electrical Appliance Type
Facsimile	Facsimile Electrical Appliance Type
Printer	Printer Electrical Appliance Type
Telephone	Telephone Electrical Appliance Type
UserDefined	
NotDefined	

20.5. Type IfcElectricalFixtureTypeEnum

20.5.1. Type Semantic Definition

Definition from IAI: This enumeration defines the different types of electrical fixtures an IfcElectricalFixture object can fulfill.

History

New Enumeration in IFC Release 2.0

Copyright © International Alliance for Interoperability - 1996-1999

20.5.2. PreDefined Type

This enumeration defines the available PreDefined Types for IfcElectricalFixture

20.5.3. Enumeration

LightFixture
PowerOutlet
RadiantHeater
UserDefined
NotDefined

20.6. Type IfcEquipmentTypeEnum

20.6.1. Type Semantic Definition

Definition from IAI: This enumeration defines the different types of Equipment an IfcEquipment object can fulfill.

History

This Enumeration has changed after IFC Release 1.5.1, please see the Migration Guide for details

20.6.2. PreDefined Type

This enumeration defines the available PreDefined Types for IfcEquipment

20.6.3. Enumeration

WindowCleaning
UserDefined
NotDefined

20.7. Type IfcFlowDirectionEnum

20.7.1. Type Semantic Definition

Definition from IAI: This enumeration the flow direction at a connection point as either a Source, Sink, or both SourceAndSink.

History

New Enumeration in IFC Release 2.0

20.7.2. Enumeration

Source
Sink
SourceAndSink
UserDefined
NotDefined

Copyright © International Alliance for Interoperability - 1996-1999

20.8. Type IfcFlowEquipmentTypeEnum

20.8.1. Type Semantic Definition

Definition from IAI: This enumeration defines the different types of Equipment an IfcFlowEquipment object can fulfill.

History

New Enumeration in IFC Release 2.0

20.8.2. PreDefined Type

This enumeration defines the available PreDefined Types for IfcFlowEquipment

20.8.3. Enumeration

AirFilter	Apparatus used to remove particulate or gaseous matter from air. This property set is typically used in conjunction with another piece of equipment, such as an AirHandler or PackagedACUnit
AirHandler	Equipment which modifies the psychrometric properties of a controlled air stream. It typically consists of an arrangement of Fans, Coils and AirFilters
Boiler	Equipment which converts stored energy to heat which is added to a fluid; typically used to heat water.
Chiller	Equipment used to implement a refrigeration cycle for cooling a fluid
Coil	Equipment used to provide heat transfer between non-mixing media. This is typically used in conjunction with an AirHandler or PackagedACUnit and uses a TubeBundle
Compressor	Equipment that compresses a fluid typically used in a refrigeration circuit
Convector	Equipment which adds heat to a space utilizing natural convection
CoolingTower	Equipment which rejects heat to ambient air.
Fan	Equipment which imparts mechanical work on a gas
HeatExchanger	Equipment used to provide heat transfer between non-mixing media such as both plate and shell and tube heat exchangers
Motor	Equipment used to convert electrical power to rotational mechanical power
PackagedACUnit	Equipment which utilizes an integral refrigeration cycle for cooling a fluid (typically air)
Pump	Equipment which imparts mechanical work on a liquid
TubeBundle	Tube and bundles of tubes properties used within equipment
UnitHeater	Equipment which adds heat to a space
Elevator	
Escalator	
UserDefined	
NotDefined	

20.9. Type IfcFlowFittingTypeEnum

20.9.1. Type Semantic Definition

Definition from IAI: This enumeration defines the different types of fittings an IfcFlowFitting object can fulfill.

History

New Enumeration in IFC Release 2.0

Copyright © International Alliance for Interoperability - 1996-1999

20.9.2. PreDefined Type

This enumeration defines the available PreDefined Types for IfcFlowFitting

20.9.3. Enumeration

DuctFitting
PipeFitting
UserDefined
NotDefined

20.10. Type IfcFlowSegmentTypeEnum

20.10.1. Type Semantic Definition

Definition from IAI: This enumeration defines the different types of flow segments an IfcFlowSegment object can fulfill.

History

New Enumeration in IFC Release 2.0

20.10.2. PreDefined Type

This enumeration defines the available PreDefined Types for IfcFlowSegment

20.10.3. Enumeration

DuctSegment
PipeSegment
GutterSegment
UserDefined
NotDefined

20.11. Type IfcFlowTerminalTypeEnum

20.11.1. Type Semantic Definition

Definition from IAI: This enumeration defines the different types of flow terminals an IfcFlowTerminal object can fulfill.

History

New Enumeration in IFC Release 2.0

20.11.2. PreDefined Type

This enumeration defines the available PreDefined Types for IfcFlowTerminal

Copyright © International Alliance for Interoperability - 1996-1999

20.11.3. Enumeration

AirTerminal
RoofDrain
Scupper
UserDefined
NotDefined

20.12. Type IfcPlumbingFixtureTypeEnum

20.12.1. Type Semantic Definition

Definition from IAI: This enumeration defines the different types of plumbing fixtures an IfcPlumbingFixture object can fulfill.

History

New Enumeration in IFC Release 2.0

20.12.2. PreDefined Type

This enumeration defines the available PreDefined Types for IfcPlumbingFixture

20.12.3. Enumeration

Faucet
Sink
Toilet
Urinal
Shower
UserDefined
NotDefined

20.13. Type IfcPrimaryFittingEnum

20.13.1. Type Semantic Definition

History

New Enumeration in IFC Release 2.0

20.13.2. Enumeration

Entry
Exit
Elbow
Transition
Junction
Obstruction
UserDefined

Copyright © International Alliance for Interoperability - 1996-1999

NotDefined

20.14. Class IfcDiscreteElement

20.14.1. Class Semantic Definition

Definition from IAI: This class defines elements in a building services system that do not participate as either equipment or distribution elements, such as insulation or attaching elements. This class will be more fully elaborated in future IFC versions.

History

This Entity has changed after IFC Release 1.5.1, please see the Migration Guide for details

20.14.2. Attribute and Relationship Definitions

Superclasses and Subclasses

IfcRoot
  IfcObject
    IfcProduct
      IfcElement
        IfcBuildingElement
          IfcDiscreteElement

Attributes and Relationships

	Attribute / Relation	Definition	Data or Rel. Type	Min.	Max.	Default
	PredefinedType	Predefined generic types are specified in an Enumeration. A TypeDefinition is available for each generic type (as the required attributes differ). Use Type Definition corresponding to this generic type.	IfcDiscreteElementTypeEnum	Insulation	Insulation	Insulation
INV	Attaches	Inverse relationship to a related distribution element to which this discrete element is attached.	IfcRelAttachesElements	n/a	n/a	NIL

Formal Propositions

WR61	

20.14.3. Interface Definitions

- I_DiscreteElement

20.14.4. Type Definitions

Type driven PropertySets

PreDefined Type	Associated PropertySet
Insulation	Pset_Insulation
UserDefined	
NotDefined	

Copyright © International Alliance for Interoperability - 1996-1999

20.14.5. Geometry Use Definitions

Object Geometry in Context

The geometric representation of IfcDiscreteElement is given by the IfcProductShape, allowing multiple geometric representations. Included are:

Local Position

The local placement for IfcDiscreteElement is defined in its supertype, IfcProduct. It is defined by the

- IfcLocalPlacement, which defines the local coordinate system that is referenced by all geometric representations.

Standard Geometric Representation

The standard geometric representation of IfcDiscreteElement is defined using **explicit geometry**. The faceted B-Rep capabilities (with or without voids) shall be supported for standard representation.

Currently, the usage of attribute driven geometry for IfcDiscreteElement is not supported.

20.15. Class IfcDistributionControlElement

20.15.1. Class Semantic Definition

Definition from IAI: This class defines elements of a distribution system that are used to impart control over other elements of the distribution system.

History

New Entity in IFC Release 2.0

20.15.2. Attribute and Relationship Definitions

Superclasses and Subclasses

IfcRoot
  IfcObject
    IfcProduct
      IfcElement
        IfcBuildingElement
          IfcDistributionElement
            IfcDistributionControlElement
              IfcActuator
              IfcController
              IfcSensor

Attributes and Relationships

	Attribute / Relation	Definition	Data or Rel. Type	Min.	Max.	Default
	ControlElementID	The ControlElement Point Identification assigned to this control element by the Building Automation System.	STRING	see type	see type	empty string
INV	FlowElement	Inverse relationship to a distribution flow element	SET [0:1] OF IfcDistributionFlowElement	n/a	n/a	NIL

Copyright © International Alliance for Interoperability - 1996-1999

20.15.3. Interface Definitions

- I_DistributionControlElement

20.15.4. Geometry Use Definitions

Object Geometry in Context

The geometric representation of IfcDistributionControlElement is given by the IfcProductShape, allowing multiple geometric representations. Included are:

Local Position

The local placement for IfcDistributionControlElement is defined in its supertype, IfcProduct. It is defined by the

- IfcLocalPlacement, which defines the local coordinate system that is referenced by all geometric representations.

Standard Geometric Representation

The standard geometric representation of IfcDistributionControlElement is defined using **explicit geometry**. The faceted B-Rep capabilities (with or without voids) shall be supported for standard representation.

Currently, the usage of attribute driven geometry for IfcDistributionControlElement is not supported.

20.16. Class IfcDistributionElement

20.16.1. Class Semantic Definition

Definition from IAI: This class defines elements that participate in a distribution system.

History

This Entity has changed after IFC Release 1.5.1, please see the Migration Guide for details

20.16.2. Attribute and Relationship Definitions

Superclasses and Subclasses

IfcRoot
  IfcObject
    IfcProduct
      IfcElement
        IfcBuildingElement
          IfcDistributionElement
            IfcDistributionFlowElement
            IfcDistributionControlElement

Attributes and Relationships

	Attribute / Relation	Definition	Data or Rel. Type	Min.	Max.	Default
INV	AttachedBy	Inverse relationship to a related discrete element which might be attached to this distribution element.	SET [0:?] OF IfcRelAttachesElements	n/a	n/a	NIL

Copyright © International Alliance for Interoperability - 1996-1999

20.16.3. Interface Definitions

- I_DistributionElement

20.16.4. Geometry Use Definitions

Object Geometry in Context

The geometric representation of IfcDistributionElement is given by the IfcProductShape, allowing multiple geometric representations. Included are:

Local Position

The local placement for IfcDistributionElement is defined in its supertype, IfcProduct. It is defined by the

- IfcLocalPlacement, which defines the local coordinate system that is referenced by all geometric representations.

Standard Geometric Representation

The standard geometric representation of IfcDistributionElement is defined using **explicit geometry**. The faceted B-Rep capabilities (with or without voids) shall be supported for standard representation.

Currently, the usage of attribute driven geometry for IfcDistributionElement is not supported.

20.17. Class IfcDistributionFlowElement

20.17.1. Class Semantic Definition

Definition from IAI: This class defines elements of a distribution system that facilitate the distribution of energy or matter, such as air, water or power.

History

New Entity in IFC Release 2.0

20.17.2. Attribute and Relationship Definitions

Superclasses and Subclasses

IfcRoot
  IfcObject
    IfcProduct
      IfcElement
        IfcBuildingElement
          IfcDistributionElement
            IfcDistributionFlowElement
              IfcElectricalFixture
              IfcPlumbingFixture
              IfcFlowTerminal
              IfcFlowController
              IfcFlowSegment
              IfcFlowFitting
              IfcFlowEquipment

Attributes and Relationships

	Attribute / Relation	Definition	Data or Rel. Type	Min.	Max.	Default

Copyright © International Alliance for Interoperability - 1996-1999

	FlowElementType	Predefined generic types are specified in an Enumeration. A TypeDefinition is available for each generic type (as the required attributes differ). Use Type Definition corresponding to this generic type.	IfcDistributionFlowElementTypeEnum	FluidFlow	Scupper	FluidFlow
	ControlElements	References control elements which may be used to impart control on the Distribution Element.	SET [0:?] OF IfcDistributionControlElement	n/a	n/a	NIL
INV	ToRelatingPort	Inverse relationship to the port that is being connected to.	SET [0:?] OF IfcRelConnectsPorts	n/a	n/a	NIL
INV	ToRelatedPort	Inverse relationship to the port that is being connected from.	SET [0:?] OF IfcRelConnectsPorts	n/a	n/a	NIL

20.17.3. Interface Definitions

- I_DistributionFlowElement

20.17.4. Geometry Use Definitions

Object Geometry in Context

The geometric representation of IfcDistributionFlowElement is given by the IfcProductShape, allowing multiple geometric representations. Included are:

Local Position

The local placement for IfcDistributionFlowElement is defined in its supertype, IfcProduct. It is defined by the

- IfcLocalPlacement, which defines the local coordinate system that is referenced by all geometric representations.

Standard Geometric Representation

The standard geometric representation of IfcDistributionFlowElement is defined using **explicit geometry**. The faceted B-Rep capabilities (with or without voids) shall be supported for standard representation.

Currently, the usage of attribute driven geometry for IfcDistributionFlowElement is not supported.

20.18. Class IfcDistributionPortGeometry

20.18.1. Class Semantic Definition

Definition from IAI: This class defines the geometric location and configuration of a port on a distribution element. This information can be used to determine how to physically connect distribution elements.

History

New Entity in IFC Release 2.0

20.18.2. Attribute and Relationship Definitions

Superclasses and Subclasses

IfcRoot
  IfcObject
    IfcControl

Copyright © International Alliance for Interoperability - 1996-1999

IfcDistributionPortGeometry

Attributes and Relationships

	Attribute / Relation	Definition	Data or Rel. Type	Min.	Max.	Default
	PredefinedType	Predefined generic types are specified in an Enumeration. A TypeDefinition is available for each generic type (as the required attributes differ). Use Type Definition corresponding to this generic type.	IfcDistributionPortTypeEnum	RoundDuctPort	RoundPipePort	RoundDuctPort
	PortLocation	Local placement of the port relative to its distribution element's local placement	IfcLocalPlacement	n/a	n/a	NIL
	PortShape	Profile that defines the port connection geometry	IfcAttDrivenProfileDef	n/a	n/a	NIL

Formal Propositions

WR71	

20.18.3. Interface Definitions

- I_DistributionPort

20.18.4. Type Definitions

Type driven PropertySets

PreDefined Type	Associated PropertySet
RoundDuctPort	Pset_RoundDuctPort
RectangularDuctPort	Pset_RectangularDuctPort
OvalDuctPort	Pset_OvalDuctPort
RoundPipePort	Pset_RoundPipePort
UserDefined	
NotDefined	

20.18.5. Geometry Use Definitions

This class has no geometric representation.

20.19. Class IfcElectricalAppliance

20.19.1. Class Semantic Definition

Definition from IAI: This class defines common electrical appliances found in a typical AEC/FM project. Electrical Appliances generally consist of electrical devices which are not a fixed part of the building but instead can be moved from one space to another and powered with electricity.

History

This Entity has changed after IFC Release 1.5.1, please see the Migration Guide for details

Copyright © International Alliance for Interoperability - 1996-1999

20.19.2. Attribute and Relationship Definitions

Superclasses and Subclasses

IfcRoot
IfcObject
IfcProduct
IfcElement
IfcBuildingElement
IfcElectricalAppliance

Attributes and Relationships

	Attribute / Relation	Definition	Data or Rel. Type	Min.	Max.	Default
	PredefinedType	Predefined generic types are specified in an Enumeration. A TypeDefinition is available for each generic type (as the required attributes differ). Use Type Definition corresponding to this generic type.	IfcElectricalApplianceTypeEnum	Computer	Telephone	Telephone

Formal Propositions

WR61	

20.19.3. Interface Definitions

- I_ElectricalAppliance

20.19.4. Type Definitions

Common PropertySet

Pset_ElectricalApplianceCommon

Type driven PropertySets

PreDefined Type	Associated PropertySet
Computer	Pset_Computer
Copier	Pset_Copier
Facsimile	Pset_Facsimile
Printer	Pset_Printer
Telephone	Pset_Telephone
UserDefined	
NotDefined	

20.19.5. Geometry Use Definitions

The geometric representation of IfcElectricalAppliance is given by the IfcProductShape, allowing multiple geometric representations. Included are:

Local Position

The local for IfcElectricalAppliance is defined in its supertype, IfcProduct. It is defined by the

- IfcLocalPlacement, which defines the local coordinate system that is referenced by all geometric representations.

Copyright © International Alliance for Interoperability - 1996-1999

Standard Geometric Representation

The standard geometric representation of IfcElectricalAppliance is defined using **explicit geometry**. The faceted B-Rep capabilities (with or without voids) shall be supported for standard representation.

Currently, the usage of attribute driven geometry for IfcElectricalAppliance is not supported.

20.20. Class IfcElectricalFixture

20.20.1. Class Semantic Definition

Definition from IAI: Permanently attached appendage, appliance, or device that requires electrical power and is connected to a building electrical system (e.g. lighting fixtures).

History

New Entity in IFC Release 2.0

20.20.2. Attribute and Relationship Definitions

Superclasses and Subclasses

IfcRoot
IfcObject
IfcProduct
IfcElement
IfcBuildingElement
IfcDistributionElement
IfcDistributionFlowElement
IfcElectricalFixture
IfcLightFixture

Attributes and Relationships

	Attribute / Relation	Definition	Data or Rel. Type	Min.	Max.	Default
	PredefinedType	Predefined generic types are specified in an Enumeration. A TypeDefinition is available for each generic type (as the required attributes differ). Use Type Definition corresponding to this generic type.	IfcElectricalFixtureTypeEnum	Light	RadiantHeater	Light

Formal Propositions

WR81	

20.20.3. Interface Definitions

- I_Fixture

20.20.4. Type Definitions

Type driven PropertySets

PreDefined Type	Associated PropertySet
LightFixture	Pset_LightFixture

Copyright © International Alliance for Interoperability - 1996-1999

PowerOutlet	Pset_PowerOutlet
RadiantHeater	Pset_RadiantHeater
UserDefined	
NotDefined	

20.20.5. Geometry Use Definitions

Object Geometry in Context

The geometric representation of IfcElectricalFixture is given by the IfcProductShape, allowing multiple geometric representations. Included are:

Local Position

The local placement for IfcElectricalFixture is defined in its supertype, IfcProduct. It is defined by the

- IfcLocalPlacement, which defines the local coordinate system that is referenced by all geometric representations.

Standard Geometric Representation

The standard geometric representation of IfcElectricalFixture is defined using **explicit geometry**. The faceted B-Rep capabilities (with or without voids) shall be supported for standard representation.

Currently, the usage of attribute driven geometry for IfcElectricalFixture is not supported.

20.21. Class IfcEquipment

20.21.1. Class Semantic Definition

Definition from IAI: Equipment is an apparatus used to perform conveyance, work, energy conversion or heat transfer. This class is used to capture the characteristics of equipment that does not participate in a distribution system.

History

This Entity has changed after IFC Release 1.5.1, please see the Migration Guide for details

20.21.2. Attribute and Relationship Definitions

Superclasses and Subclasses

IfcRoot
  IfcObject
    IfcProduct
      IfcElement
        IfcBuildingElement
          IfcEquipment

Attributes and Relationships

	Attribute / Relation	Definition	Data or Rel. Type	Min.	Max.	Default
	PredefinedType	Predefined generic types are specified in an Enumeration. A TypeDefinition is available for each generic type (as the required attributes differ). Use Type Definition corresponding to this generic	IfcEquipmentTypeEnum	Motor	WindowCleaning	Motor

Copyright © International Alliance for Interoperability - 1996-1999

		type.				

Formal Propositions

WR61	

20.21.3. Interface Definitions

- I_Equipment

20.21.4. Type Definitions

Common PropertySet

Pset_EquipmentCommon

Type driven PropertySets

PreDefined Type	Associated PropertySet
WindowCleaning	Pset_WindowCleaning
UserDefined	
NotDefined	

20.21.5. Geometry Use Definitions

Object Geometry in Context

The geometric representation of IfcEquipment is given by the IfcProductShape, allowing multiple geometric representations. Included are:

Local Position

The local position for IfcEquipment is defined in its supertype, IfcProduct. It is defined by the

- IfcLocalPlacement, which defines the local coordinate system that is referenced by all geometric representations.

Standard Geometric Representation

The standard geometric representation of IfcEquipment is defined using **explicit geometry**. The faceted B-Rep capabilities (with or without voids) shall be supported for standard representation.

Currently, the usage of attribute driven geometry for IfcEquipment is not supported.

20.22. Class IfcFlowController

20.22.1. Class Semantic Definition

Definition from IAI: This class defines elements of a distribution system that affect flow through a distribution system.

History

New Entity in IFC Release 2.0

Copyright © International Alliance for Interoperability - 1996-1999

20.22.2. Attribute and Relationship Definitions

Superclasses and Subclasses

IfcRoot
- IfcObject
  - IfcProduct
    - IfcElement
      - IfcBuildingElement
        - IfcDistributionElement
          - IfcDistributionFlowElement
            - **IfcFlowController**
              - IfcAirTerminalBox
              - IfcDamper
              - IfcValve

Attributes and Relationships

No attributes defined at this level.

20.22.3. Interface Definitions

- I_FlowController

20.22.4. Geometry Use Definitions

Object Geometry in Context

The geometric representation of IfcFlowController is given by the IfcProductShape, allowing multiple geometric representations. Included are:

Local Position

The local placement for IfcFlowController is defined in its supertype, IfcProduct. It is defined by the

- IfcLocalPlacement, which defines the local coordinate system that is referenced by all geometric representations.

Standard Geometric Representation

The standard geometric representation of IfcFlowController is defined using **explicit geometry**. The faceted B-Rep capabilities (with or without voids) shall be supported for standard representation.

Currently, the usage of attribute driven geometry for IfcFlowController is not supported.

20.23. Class IfcFlowEquipment

20.23.1. Class Semantic Definition

Definition from IAI: FlowEquipment is an apparatus used to perform conveyance, work, energy conversion or heat transfer. This class is used to capture the characteristics of equipment that is participating in a distribution system.

History

New Entity in IFC Release 2.0

Copyright © International Alliance for Interoperability - 1996-1999

20.23.2. Attribute and Relationship Definitions

Superclasses and Subclasses

IfcRoot
IfcObject
IfcProduct
IfcElement
IfcBuildingElement
IfcDistributionElement
IfcDistributionFlowElement
IfcFlowEquipment

Attributes and Relationships

	Attribute / Relation	Definition	Data or Rel. Type	Min.	Max.	Default
	PredefinedType	Predefined generic types are specified in an Enumeration. A TypeDefinition is available for each generic type (as the required attributes differ). Use Type Definition corresponding to this generic type.	IfcFlowEquipmentTypeEnum	AirFilter	UnitHeater	AirFilter

Formal Propositions

WR81	

20.23.3. Interface Definitions

- I_Equipment

20.23.4. Type Definitions

Common PropertySet

Pset_EquipmentCommon

Type driven PropertySets

PreDefined Type	Associated PropertySet
AirFilter	Pset_AirFilter
AirHandler	Pset_AirHandler
Boiler	Pset_Boiler
Chiller	Pset_Chiller
Coil	Pset_Coil
Compressor	Pset_Compressor
Convector	Pset_Convector
CoolingTower	Pset_CoolingTower
Fan	Pset_Fan
HeatExchanger	Pset_HeatExchanger
PackagedACUnit	Pset_PackagedACUnit
Pump	Pset_Pump
TubeBundle	Pset_TubeBundle
UnitHeater	Pset_UnitHeater
Elevator	Pset_Elevator

Copyright © International Alliance for Interoperability - 1996-1999

Escalator	Pset_Escalator
Motor	Pset_Motor
UserDefined	
NotDefined	

20.23.5. Geometry Use Definitions

Object Geometry in Context

The geometric representation of IfcFlowEquipment is given by the IfcProductShape, allowing multiple geometric representations. Included are:

Local Position

The local position for IfcFlowEquipment is defined in its supertype, IfcProduct. It is defined by the

- IfcLocalPlacement, which defines the local coordinate system that is referenced by all geometric representations.

Standard Geometric Representation

The standard geometric representation of IfcFlowEquipment is defined using **explicit geometry**. The faceted B-Rep capabilities (with or without voids) shall be supported for standard representation.

Currently, the usage of attribute driven geometry for IfcFlowEquipment is not supported.

20.24. Class IfcFlowFitting

20.24.1. Class Semantic Definition

Definition from IAI: A junction or transition in a flow distribution system (e.g., elbow, tee, etc.).

History

New Entity in IFC Release 2.0

20.24.2. Attribute and Relationship Definitions

Superclasses and Subclasses

IfcRoot
  IfcObject
    IfcProduct
      IfcElement
        IfcBuildingElement
          IfcDistributionElement
            IfcDistributionFlowElement
              IfcFlowFitting

Attributes and Relationships

	Attribute / Relation	Definition	Data or Rel. Type	Min.	Max.	Default
	PredefinedType	Predefined generic types are specified in an Enumeration. A TypeDefinition is available for each generic type (as the required attributes differ). Use Type Definition corresponding to this generic	IfcFlowFittingTypeEnum	DuctFitting	PipeFitting	DuctFitting

Copyright © International Alliance for Interoperability - 1996-1999

		type.				
	PrimaryFittingType	Enumeration that identifies the primary type of fitting (i.e., elbow, transition, junction, etc.)	IfcPrimaryFittingEnum	Entry	Unset	Elbow

Formal Propositions

WR81	

20.24.3. Interface Definitions

- I_FlowFitting

20.24.4. Type Definitions

Type driven PropertySets

PreDefined Type	Associated PropertySet
DuctFitting	Pset_DuctFitting
PipeFitting	Pset_PipeFitting
UserDefined	
NotDefined	

20.24.5. Geometry Use Definitions

Object Geometry in Context

The geometric representation of IfcFlowFitting is given by the IfcProductShape, allowing multiple geometric representations. Included are:

Local Position

The local position for IfcFlowFitting is defined in its supertype, IfcProduct. It is defined by the

- IfcLocalPlacement, which defines the local coordinate system that is referenced by all geometric representations.

Standard Geometric Representation

The standard geometric representation of IfcFlowFitting is defined using **explicit geometry**. The faceted B-Rep capabilities (with or without voids) shall be supported for standard representation.

Currently, the usage of attribute driven geometry for IfcFlowFitting is not supported.

20.25. Class IfcFlowSegment

20.25.1. Class Semantic Definition

Definition from IAI: A segment of a flow distribution system that is typically straight, contiguous and has only two ports (e.g., a section of pipe or duct).

History

New Entity in IFC Release 2.0

Copyright © International Alliance for Interoperability - 1996-1999

20.25.2. Attribute and Relationship Definitions

Superclasses and Subclasses

IfcRoot
IfcObject
IfcProduct
IfcElement
IfcBuildingElement
IfcDistributionElement
IfcDistributionFlowElement
IfcFlowSegment

Attributes and Relationships

	Attribute / Relation	Definition	Data or Rel. Type	Min.	Max.	Default
	PredefinedType	Predefined generic types are specified in an Enumeration. A TypeDefinition is available for each generic type (as the required attributes differ). Use Type Definition corresponding to this generic type.	IfcFlowSegmentTypeEnum	DuctSegment	PipeSegment	DuctSegment

Formal Propositions

WR81	

20.25.3. Interface Definitions

- I_FlowSegment

20.25.4. Type Definitions

Type driven PropertySets

PreDefined Type	Associated PropertySet
DuctSegment	Pset_DuctSegment
PipeSegment	Pset_PipeSegment
GutterSegment	Pset_GutterSegment
UserDefined	
NotDefined	

20.25.5. Geometry Use Definitions

Object Geometry in Context

The geometric representation of IfcFlowSegment is given by the IfcProductShape, allowing multiple geometric representations. Included are:

Local Position

The local position for IfcFlowSegment is defined in its supertype, IfcProduct. It is defined by the

- IfcLocalPlacement, which defines the local coordinate system that is referenced by all geometric representations.

Copyright © International Alliance for Interoperability - 1996-1999

Standard Geometric Representation

The standard geometric representation of IfcFlowSegment is defined using **explicit geometry**. The faceted B-Rep capabilities (with or without voids) shall be supported for standard representation.

Currently, the usage of attribute driven geometry for IfcFlowSegment is not supported.

20.26. Class IfcFlowTerminal

20.26.1. Class Semantic Definition

Definition from IAI: A terminus or beginning of a distribution system (e.g., air outlet, drain, etc.).

History

New Entity in IFC Release 2.0

20.26.2. Attribute and Relationship Definitions

Superclasses and Subclasses

IfcRoot
IfcObject
IfcProduct
IfcElement
IfcBuildingElement
IfcDistributionElement
IfcDistributionFlowElement
IfcFlowTerminal

Attributes and Relationships

	Attribute / Relation	Definition	Data or Rel. Type	Min.	Max.	Default
	PredefinedType	Predefined generic types are specified in an Enumeration. A TypeDefinition is available for each generic type (as the required attributes differ). Use Type Definition corresponding to this generic type.	IfcFlowTerminalTypeEnum	DuctSegment	PipeSegment	DuctSegment

Formal Propositions

WR81	

20.26.3. Interface Definitions

- I_FlowSegment

20.26.4. Type Definitions

Type driven PropertySets

PreDefined Type	Associated PropertySet
AirTerminal	Pset_AirTerminal
RoofDrain	Pset_RoofDrain
Scupper	Pset_Scupper

Copyright © International Alliance for Interoperability - 1996-1999

UserDefined	
NotDefined	

20.26.5. Geometry Use Definitions

Object Geometry in Context

The geometric representation of IfcFlowTerminal is given by the IfcProductShape, allowing multiple geometric representations. Included are:

Local Position

The local position for IfcFlowTerminal is defined in its supertype, IfcProduct. It is defined by the

- IfcLocalPlacement, which defines the local coordinate system that is referenced by all geometric representations.

Standard Geometric Representation

The standard geometric representation of IfcFlowTerminal is defined using **explicit geometry**. The faceted B-Rep capabilities (with or without voids) shall be supported for standard representation.

Currently, the usage of attribute driven geometry for IfcFlowTerminal is not supported.

20.27. Class IfcLightFixture

20.27.1. Class Semantic Definition

Definition from IAI: Electrically powered fixture that provides illuminence.

History

New Entity in IFC Release 2.0

20.27.2. Attribute and Relationship Definitions

Superclasses and Subclasses

IfcRoot
  IfcObject
    IfcProduct
      IfcElement
        IfcBuildingElement
          IfcDistributionElement
            IfcDistributionFlowElement
              IfcElectricalFixture
                IfcLightFixture

Attributes and Relationships

	Attribute / Relation	Definition	Data or Rel. Type	Min.	Max.	Default
	LuminousProperties	Luminous properties for this light fixture	IfcLightSource	n/a	n/a	NIL

20.27.3. Interface Definitions

- I_LightFixture

Copyright © International Alliance for Interoperability - 1996-1999

20.27.4. Geometry Use Definitions

Object Geometry in Context

The geometric representation of IfcLightFixture is given by the IfcProductShape, allowing multiple geometric representations. Included are:

Local Position

The local placement for IfcLightFixture is defined in its supertype, IfcProduct. It is defined by the

- IfcLocalPlacement, which defines the local coordinate system that is referenced by all geometric representations.

Standard Geometric Representation

The standard geometric representation of IfcLightFixture is defined using **explicit geometry**. The faceted B-Rep capabilities (with or without voids) shall be supported for standard representation.

Currently, the usage of attribute driven geometry for IfcLightFixture is not supported.

20.28. Class IfcPlumbingFixture

20.28.1. Class Semantic Definition

Definition from IAI: Permanently attached appendage, appliance, or device that requires plumbing services and is connected to a building plumbing system (e.g. water closets, sinks, etc.).

History

New Entity in IFC Release 2.0

20.28.2. Attribute and Relationship Definitions

Superclasses and Subclasses

IfcRoot
  IfcObject
    IfcProduct
      IfcElement
        IfcBuildingElement
          IfcDistributionElement
            IfcDistributionFlowElement
              IfcPlumbingFixture

Attributes and Relationships

	Attribute / Relation	Definition	Data or Rel. Type	Min.	Max.	Default
	PredefinedType	Predefined generic types are specified in an Enumeration. A TypeDefinition is available for each generic type (as the required attributes differ). Use Type Definition corresponding to this generic type.	IfcPlumbingFixtureTypeEnum	Faucet	Dishwasher	Faucet

Formal Propositions

WR81	

Copyright © International Alliance for Interoperability - 1996-1999

20.28.3. Interface Definitions

- I_Fixture

20.28.4. Type Definitions

Type driven PropertySets

PreDefined Type	Associated PropertySet
Faucet	Pset_Faucet
Sink	Pset_Sink
Toilet	Pset_Toilet
Urinal	Pset_Urinal
Shower	Pset_Shower
UserDefined	
NotDefined	

20.28.5. Geometry Use Definitions

Object Geometry in Context

The geometric representation of IfcPlumbingFixture is given by the IfcProductShape, allowing multiple geometric representations. Included are:

Local Position

The local placement for IfcPlumbingFixture is defined in its supertype, IfcProduct. It is defined by the

- IfcLocalPlacement, which defines the local coordinate system that is referenced by all geometric representations.

Standard Geometric Representation

The standard geometric representation of IfcPlumbingFixture is defined using **explicit geometry**. The faceted B-Rep capabilities (with or without voids) shall be supported for standard representation.

Currently, the usage of attribute driven geometry for IfcPlumbingFixture is not supported.

20.29. Class IfcRelAttachesElements

20.29.1. Class Semantic Definition

Definition from IAI: This class is used to define the location and shape of an attachment between an IfcDistributionElement and an IfcDiscreteElement.

History

New Entity in IFC Release 2.0

20.29.2. Attribute and Relationship Definitions

Superclasses and Subclasses

IfcRoot
  IfcRelationship
    IfcRelAttachesElements

Copyright © International Alliance for Interoperability - 1996-1999

Attributes and Relationships

	Attribute / Relation	Definition	Data or Rel. Type	Min.	Max.	Default
	RelatingDiscreteElement	The related discrete element that is attached to a distribution element	IfcDiscreteElement	n/a	n/a	NIL
	RelatedDistributionElements	The relating distribution elements that have discrete elements attachmented to them	LIST [1:?] OF IfcDistributionElement	n/a	n/a	NIL
	AttachmentLocation	Local placement of the attachment	IfcLocalPlacement	n/a	n/a	NIL

20.29.3. Interface Definitions

- I_RelAttachesElements

20.29.4. Geometry Use Definitions

This class has no geometric representation.

20.30. Class IfcRelConnectsPorts

20.30.1. Class Semantic Definition

Definition from IAI: This class is used to define the physical shapes of two connected ports within a distribution system.

History

New Entity in IFC Release 2.0

20.30.2. Attribute and Relationship Definitions

Superclasses and Subclasses

IfcRoot
  IfcRelationship
    IfcRelConnectsPorts

Attributes and Relationships

	Attribute / Relation	Definition	Data or Rel. Type	Min.	Max.	Default
	RelatingElement	The IfcDistributionFlowElement that is being connected to.	IfcDistributionFlowElement	n/a	n/a	NIL
	RelatedElement	The IfcDistributionFlowElement that is being connected from.	IfcDistributionFlowElement	n/a	n/a	NIL
	FlowDirection	Enumeration that identifies if this port is a Sink (inlet), a Source (outlet) or both a SinkAndSource.	IfcFlowDirectionEnum	Source	SourceAndSink	Source
OPT	ConnectionGeometry	The geometric definition of the port and as well as any specific connection characteristics	IfcDistributionPortGeometry	n/a	n/a	NIL

Copyright © International Alliance for Interoperability - 1996-1999

20.30.3. Interface Definitions

- I_RelConnectsPorts

20.30.4. Geometry Use Definitions

This class has no geometric representation.

20.31. PropertySet Pset_24HourSchedule

20.31.1. PropertySet Semantic Definition

Definition from IAI: Schedule of usage for a 24-hour period. This property set is typically used for defining schedules of operation (e.g., lighting, occupancy, etc.) for use in calculating thermal loads.

20.31.2. Attribute and Relationship Definitions

Property Name	Definition	Property Type	Data or Rel. Type	Min.	Max.	Default
Name	Name of schedule	IfcSimpleProperty	IfcString	see type	see type	empty string
UsageList	List of decimal fractions between 0 and 1 reflecting hourly usage intensity. The first value in the list represents the hour between midnight and 1 AM, the second value in the list represents the hour between 1 and 2 AM, etc. NOTES: 1) this will be implemented as a shared Pset_ScheduleUsageList - which contains a list of IfcReal properties	IfcPropertyList	IfcSimpleProperty, IfcReal	0	1	0
Duration	Schedule start and end dates and times	IfcSimpleProperty	IfcTimeMeasure	see type	see type	0

20.32. PropertySet Pset_AggregateLoadInformation

20.32.1. PropertySet Semantic Definition

Definition from IAI: The aggregated thermal loads experienced by one or many spaces or zones. This aggregate load information is typically addressed by a system or plant.

20.32.2. Attribute and Relationship Definitions

Property Name	Definition	Property Type	Data or Rel. Type	Min.	Max.	Default
TotalCoolingLoad	The peak total cooling load for the building (Data type = PowerMeasure)	IfcSimplePropertyWithUnit	IfcReal, PowerUnit	see type	see type	0
TotalHeatingLoad	The peak total heating load for	IfcSimplePropertyW	IfcReal, PowerUnit	see type	see type	0

Copyright © International Alliance for Interoperability - 1996-1999

	the building (Data type = PowerMeasure)	ithUnit				
LightingDiversity	Lighting diversity. (Data type = PercentMeasure)	IfcSimplePropertyWithUnit	IfcReal, PercentMeasure	see type	see type	0
InfiltrationDiversity Summer	Diversity factor for Summer infiltration. (Data type = PercentMeasure)	IfcSimplePropertyWithUnit	IfcReal, PercentMeasure	see type	see type	0
InfiltrationDiversity Winter	Diversity factor for Winter infiltration. (Data type = PercentMeasure)	IfcSimplePropertyWithUnit	IfcReal, PercentMeasure	see type	see type	0
ApplianceDiversity	Diversity of applicance load. (Data type = PercentMeasure)	IfcSimplePropertyWithUnit	IfcReal, PercentMeasure	see type	see type	0
LoadSafetyFactor	Load safety factor. (Data type = PercentMeasure)	IfcSimplePropertyWithUnit	IfcReal, PercentMeasure	see type	see type	0

20.33. PropertySet Pset_AirFilter

20.33.1. PropertySet Semantic Definition

Definition from IAI: Apparatus used to remove particulate or gaseous matter from air. This property set is typically used in conjunction with another piece of equipment, such as an AirHandler or PackagedACUnit.

20.33.2. Attribute and Relationship Definitions

Property Name	Definition	Property Type	Data or Rel. Type	Min.	Max.	Default
CommonEquipmentProperties	Reference to the 'parent' SharedPropertySet (Pset_EquipmentCommon). Contains the shared values for this type -- of properties that are stored for all types of equipment.	IfcObjectReference	IfcGloballyUniqueId, Pset_EquipmentCommon	n/a	n/a	n/a
MaximumAirFlowrate	Maximum listed air flow rate of the filter based on the manufacturer. Note that rating filters is varied and not exact per ASHRAE S-24.5. (Data type = VolumetricFlowrateMeasure)	IfcSimplePropertyWithUnit	IfcReal, VolumetricFlowrateUnit	see type	see type	0
Efficiency	Efficiency of the air filter at the MaximumAirFlowrate per ASHRAE Systems and Equipment Handbook 1996 S-24.5, Figure 3. (Data type = PercentMeasure)	IfcSimplePropertyWithUnit	IfcReal, PercentMeasure	see type	see type	0
CleanPressureDrop	Pressure drop at the MaximumAirFlowrate across the filter when the filter is new per ASHRAE Standard 52.1. (Data type = PressureMeasure)	IfcSimplePropertyWithUnit	IfcReal, PressureUnit	see type	see type	0
DirtyPressureDrop	Pressure drop at the MaximumAirFlowrate	IfcSimplePropertyWithUnit	IfcReal, PressureUnit	see type	see type	0

Copyright © International Alliance for Interoperability - 1996-1999

	across the filter when the filter needs replacement per ASHRAE Standard 52.1. (Data type = PressureMeasure)					

20.34. PropertySet Pset_AirHandler

20.34.1. PropertySet Semantic Definition

Definition from IAI: Equipment which modifies the psychrometric properties of a controlled air stream. It typically consists of an arrangement of Fans, Coils and AirFilters.

20.34.2. Attribute and Relationship Definitions

Property Name	Definition	Property Type	Data or Rel. Type	Min.	Max.	Default
CommonEquipmentProperties	Reference to the 'parent' SharedPropertySet (Pset_EquipmentCommon). Contains the shared values for this type -- of properties that are stored for all types of equipment.	IfcObjectReference	IfcGloballyUniqueId, Pset_EquipmentCommon	n/a	n/a	n/a
AirHandlerConstruction	Enumeration defining how the air handler might be fabricated.	IfcEnumeratedProperty	Pset_AirHandlerConstructionEnum(ManufacturedItem, ConstructedOnSite, Other, NotKnown, Unset)			
AirHandlerFanCoilArrangement	Enumeration defining the arrangement of the supply air fan and the cooling coil.	IfcEnumeratedProperty	Pset_AirHandlerFanCoilArrangementEnum(BlowThrough, DrawThrough, Other, NotKnown, Unset)			
DualDeck	Does the AirHandler have a dual deck? TRUE = Yes, FALSE = No.	IfcSimpleProperty	IfcBoolean	FALSE	TRUE	FALSE
Fans	Bag of one or more references to an IfcFlowEquipment object of type Fan that defines the supply, return or exhaust air fan(s) that are used by the AirHandler	IfcPropertyList	IfcObjectReference, IfcGloballyUniqueId, IfcFlowEquipment	n/a	n/a	n/a
Coils	Bag of one or more references to an IfcFlowEquipment object of type Coil that defines the coil(s) that are used by the AirHandler	IfcPropertyList	IfcObjectReference, IfcGloballyUniqueId, IfcFlowEquipment	n/a	n/a	n/a
AirFilters	Bag of one or more references to an IfcFlowEquipment object of type AirFilter that defines the air filter(s) that are used by the AirHandler	IfcPropertyList	IfcObjectReference, IfcGloballyUniqueId, IfcFlowEquipment	n/a	n/a	n/a

Copyright © International Alliance for Interoperability - 1996-1999

20.35. PropertySet Pset_AirSideSystemInformation

20.35.1. PropertySet Semantic Definition

Definition from IAI: Attributes that apply to an air side HVAC system.

20.35.2. Attribute and Relationship Definitions

Property Name	Definition	Property Type	Data or Rel. Type	Min.	Max.	Default
Name	The name of the air side system	IfcSimpleProperty	IfcString	see type	see type	empty string
Description	The description of the air side system	IfcSimpleProperty	IfcString	see type	see type	empty string
AirSideSystemType	This enumeration specifies the basic types of possible air side systems (e.g., Constant Volume, Variable Volume, etc.)	IfcEnumeratedProperty	Pset_AirSideSystemTypeEnum(ConstantVolume, ConstantVolumeSingleZone, ConstantVolumeMultipleZoneReheat, ConstantVolumeBypass, VariableAirVolume, VariableAirVolumeReheat, VariableAirVolumeInduction, VariableAirVolumeFanPowered, VariableAirVolumeDualConduit, VariableAirVolumeVariableDiffusers, VariableAirVolumeVariableTemperature, Other, NotKnown, Unset)			
AirSideSystemDistributionType	This enumeration defines the basic types of air side systems (e.g., SingleDuct, DualDuct, Multizone, etc.)	IfcEnumeratedProperty	Pset_AirSideSystemDistributionTypeEnum(SingleDuct, DualDuct, Multizone, Other, NotKnown, Unset)			
TotalAirflow	The total design supply air flowrate required for the system for either heating or cooling conditions, whichever is greater (Data type = VolumetricFlowrateMeasure)	IfcSimplePropertyWithUnit	IfcReal, VolumetricFlowrateUnit	see type	see type	0
EnergyGainTotal	The total amount of energy gains for the spaces served by the system during the peak cooling conditions, plus any system-level total energy gains (Data type = PowerMeasure)	IfcSimplePropertyWithUnit	IfcReal, PowerUnit	see type	see type	0
AirflowSensible	The air flowrate required to satisfy the sensible peak loads (Data type = VolumetricFlowrateMeasure)	IfcSimplePropertyWithUnit	IfcReal, VolumetricFlowrateUnit	see type	see type	0
EnergyGainSensible	The sum of total energy gains for the spaces	IfcSimplePropertyWithUnit	IfcReal, PowerUnit	see type	see type	0

Copyright © International Alliance for Interoperability - 1996-1999

	served by the system during the peak cooling conditions, plus any system-level sensible energy gains (Data type = PowerMeasure)					
CoolingCoilEnteringDryBulb	The system cooling coil entering dry bulb temperature at the peak	IfcSimpleProperty	IfcThermodynamicTemperatureMeasure	see type	see type	0
CoolingCoilEnteringWetBulb	The system cooling coil entering wet bulb temperature at the peak	IfcSimpleProperty	IfcThermodynamicTemperatureMeasure	see type	see type	0
CoolingCoilLeavingDryBulb	The system cooling coil entering dry bulb temperature at the peak	IfcSimpleProperty	IfcThermodynamicTemperatureMeasure	see type	see type	0
CoolingCoilLeavingWetBulb	The system cooling coil entering wet bulb temperature at the peak	IfcSimpleProperty	IfcThermodynamicTemperatureMeasure	see type	see type	0
EnergyLoss	The sum of energy losses for the spaces served by the system during the peak heating conditions (Data type = PowerMeasure)	IfcSimplePropertyWithUnit	IfcReal, PowerUnit	see type	see type	0
LightingDiversity	Lighting diversity. (Data type = PercentMeasure)	IfcSimplePropertyWithUnit	IfcReal, PercentMeasure	see type	see type	0
InfiltrationDiversitySummer	Diversity factor for Summer infiltration. (Data type = PercentMeasure)	IfcSimplePropertyWithUnit	IfcReal, PercentMeasure	see type	see type	0
InfiltrationDiversityWinter	Diversity factor for Winter infiltration. (Data type = PercentMeasure)	IfcSimplePropertyWithUnit	IfcReal, PercentMeasure	see type	see type	0
ApplianceDiversity	Diversity of applicance load. (Data type = PercentMeasure)	IfcSimplePropertyWithUnit	IfcReal, PercentMeasure	see type	see type	0
LoadSafetyFactor	Load safety factor. (Data type = PercentMeasure)	IfcSimplePropertyWithUnit	IfcReal, PercentMeasure	see type	see type	0
HeatingTemperatureDelta	Heating temperature difference for calculating space air flow rates	IfcSimpleProperty	IfcThermodynamicTemperatureMeasure	see type	see type	0
CoolingTemperatureDelta	Cooling temperature difference for calculating space air flow rates	IfcSimpleProperty	IfcThermodynamicTemperatureMeasure	see type	see type	0
Ventilation	Required outside air ventilation (Data type = VolumetricFlowrateMeasure)	IfcSimplePropertyWithUnit	IfcReal, VolumetricFlowrateUnit	see type	see type	0
FanPower	Fan motor loads contributing to the cooling load (Data type = PowerMeasure)	IfcSimplePropertyWithUnit	IfcReal, PowerUnit	see type	see type	0
DuctHeatFactor	Duct heat factor	IfcSimpleProperty	IfcReal	see type	see type	0
Fans	List of references to IfcFlowEquipment objects typically of type Fan,	IfcPropertyList	IfcObjectReference, IfcGloballyUniqueId, IfcFlowEquipment	n/a	n/a	NIL

Copyright © International Alliance for Interoperability - 1996-1999

	AirHandler or PackagedACUnit which are participating in the movement of air in the system.					

20.36. PropertySet Pset_AirTerminal

20.36.1. PropertySet Semantic Definition

Definition from IAI: This property set is used to define characteristics of an air terminal. Air terminals used to supply air are called registers, and typically have an integral damper. If there is no means of adjusting airflow, they are called grilles and are typically used for return air and exhaust. Note that this property set currently makes no distinction between these semantic definitions.

20.36.2. Attribute and Relationship Definitions

Property Name	Definition	Property Type	Data or Rel. Type	Min.	Max.	Default
AirFlowType	Enumeration defining the functional type of Air Terminal	IfcEnumeratedProperty	Pset_AirFlowTypeEnum(Supply, Return, Exhaust, Other, NotKnown, Unset)			
MaximumFlowrate	Maximum air flowrate for the terminal device (Data type = VolumetricFlowrateMeasure)	IfcSimplePropertyWithUnit	IfcReal, VolumetricFlowrateUnit	see type	see type	0
PressureLoss	Pressure loss through the terminal device at the MaximumFlowrate (Data type = PressureMeasure)	IfcSimplePropertyWithUnit	IfcReal, PressureUnit	see type	see type	0
Throw	The distance the air terminal throws the air at the MaximumFlowrate	IfcSimpleProperty	IfcLengthMeasure	see type	see type	0
SoundLevel	Reference to a property set Pset_SoundPowerLevels which contains sound power level data	IfcObjectReference	IfcGloballyUniqueId, Pset_SoundPressureLevels	n/a	n/a	n/a
ADPI	Air diffusion performance index	IfcSimpleProperty	IfcReal	see type	see type	0
FinishType	Enumeration that identifies the type of finish for the air terminal	IfcEnumeratedProperty	Pset_FinishTypeEnum(Annodize, Paint, None, Other, NotKnown, Unset)			
FinishColor	The finish color for the air terminal	IfcSimpleProperty	IfcString	see type	see type	empty string
MountingType	Enumeration that identifies the way the terminal is mounted	IfcEnumeratedProperty	Pset_MountingTypeEnum(Surface, FlatFlush, Surface, LayIn, Other, NotKnown, Unset)			
FaceType	Enumeration that identifies the how the terminal face is constructed	IfcEnumeratedProperty	Pset_FaceTypeEnum(FourWayPattern, SingleDeflection, DoubleDeflection, SightProof, EggCrate, Perforated, Louvered, Other, NotKnown, Unset)			
CoreType	Enumeration that identifies	IfcEnumeratedProp	Pset_CoreTypeEnum(None,			

Copyright © International Alliance for Interoperability - 1996-1999

	the way the terminal core is constructed	erty	ShutterBlade, CurvedBlade, Removable, Reversible, Other, NotKnown, Unset)			
CoreSetHorizontal	Degree of blade set from the centerline	IfcSimpleProperty	IfcPlaneAngleMeasure	see type	see type	0
CoreSetVertical	Degree of blade set from the centerline	IfcSimpleProperty	IfcPlaneAngleMeasure	see type	see type	0
IntegralDamper	Reference to a damper object that is integral to the terminal device	IfcObjectReference	IfcGloballyUniqueId, IfcDamper	n/a	n/a	NIL
IntegralControl	Self powered temperature control	IfcSimpleProperty	IfcBoolean	FALSE	TRUE	FALSE

20.37. PropertySet Pset_ApplianceThermalProperties

20.37.1. PropertySet Semantic Definition

Definition from IAI: Appliances or office equipment which contribute thermal loads to a space.

20.37.2. Attribute and Relationship Definitions

Property Name	Definition	Property Type	Data or Rel. Type	Min.	Max.	Default
Description	Additional information about the appliance or equipment that might be useful to the HVAC design	IfcSimpleProperty	IfcString	see type	see type	empty string
MaximumSensibleLoad	Maximum or Peak sensible thermal load contributed by equipment (Data type = PowerMeasure)	IfcSimplePropertyWithUnit	IfcReal, PowerUnit	see type	see type	0
MaximumLatentLoad	Maximum or Peak latent thermal load contributed by equipment (Data type = PowerMeasure)	IfcSimplePropertyWithUnit	IfcReal, PowerUnit	see type	see type	0
StandbySensibleLoad	Sensible thermal load contributed by equipment when it is idle (Data type = PowerMeasure)	IfcSimplePropertyWithUnit	IfcReal, PowerUnit	see type	see type	0
StandbyLatentLoad	Latent thermal load contributed by equipment when it is idle (Data type = PowerMeasure)	IfcSimplePropertyWithUnit	IfcReal, PowerUnit	see type	see type	0
SensibleLoadToRadiant	Percent of sensible thermal load to radiant heat (Data type = PercentMeasure)	IfcSimplePropertyWithUnit	IfcReal, PercentMeasure	see type	see type	0

20.38. PropertySet Pset_Boiler

20.38.1. PropertySet Semantic Definition

Definition from IAI: Equipment which converts stored energy to heat which is added to a fluid; typically used to heat water, utilizing a single input fuel source.

Copyright © International Alliance for Interoperability - 1996-1999

20.38.2. Attribute and Relationship Definitions

Property Name	Definition	Property Type	Data or Rel. Type	Min.	Max.	Default
CommonEquipment Properties	Reference to the 'parent' SharedPropertySet (Pset_EquipmentCommon). Contains the shared values for this type -- of properties that are stored for all types of equipment.	IfcObjectReference	IfcGloballyUniqueId, Pset_EquipmentCommon	n/a	n/a	n/a
BoilerType	This enumeration defines boiler types by heat transfer medium.	IfcEnumeratedProperty	Pset_BoilerTypeEnum(HotWater, GasFired, Steam, Other, NotKnown, Unset)			
HeatOutput	Total nominal boiler heat output as listed by the Boiler manufacturer. (Data type = PowerMeasure)	IfcSimplePropertyWithUnit	IfcReal, PowerUnit	see type	see type	0
PressureRating	Nominal pressure rating of the boiler as rated by ASME Boiler and Pressure Vessel Code Section IV, Rules for Construction of Heating Boilers, and Section I, Rules for Construction of Power Boilers. (Data type = PressureMeasure)	IfcSimplePropertyWithUnit	IfcReal, PressureUnit	see type	see type	0
ThermalEfficiency	Overall energy efficiency of the boiler at full load conditions. Overall Efficiency is defined as gross energy output (e.g., steam or water leaving the boiler) divided by the energy input. (Data type = PercentMeasure)	IfcSimplePropertyWithUnit	IfcReal, PercentMeasure	see type	see type	0
TubeBundle	Reference to an IfcFlowEquipment object of type TubeBundle which cointains information about the Boiler's TubeBundle	IfcObjectReference	IfcGloballyUniqueId, IfcFlowEquipment	n/a	n/a	n/a
EnergySource	This enumeration identifies the primary energy source the boiler is using.	IfcEnumeratedProperty	Pset_EnergySourceEnum(Electricity, NaturalGas, Oil, LiquifiedPetroleumGas, Propane, Steam, Other, NotKnown, Unset)			
EnergyInputRate	Nominal fuel consumption rate required to produce the total boiler heat output (Data type = VolumetricFlowrateMeasure)	IfcSimplePropertyWithUnit	IfcReal, VolumetricFlowrateUnit	see type	see type	0

Copyright © International Alliance for Interoperability - 1996-1999

20.39. PropertySet Pset_BoundaryThermalProperties

20.39.1. PropertySet Semantic Definition

Definition from IAI: This property set contains thermal properties for boundary elements. This property set is therefore attached to Architectural elements such as a wall, roof, floor, etc.

20.39.2. Attribute and Relationship Definitions

Property Name	Definition	Property Type	Data or Rel. Type	Min.	Max.	Default
BoundaryDescription	A boundary description that is used by the HVAC engineer (e.g. ASHRAE component type); this may or may not be the same material description provided by the architect.	IfcSimpleProperty	IfcString	see type	see type	empty string
BoundaryThermalTransmittanceCoefficient	Overall thermal transmittance coefficient (U-Value) of the composite materials used by the boundary element (Data type = ThermalTransmittanceMeasure)	IfcSimplePropertyWithUnit	IfcReal, IfcThermalTransmittanceMeasure	see type	see type	0
BoundaryColor	Color of the boundary (i.e. light, medium, or dark for roofs)	IfcSimpleProperty	IfcString	see type	see type	empty string

20.40. PropertySet Pset_Chiller

20.40.1. PropertySet Semantic Definition

Definition from IAI: Equipment used to implement a refrigeration cycle for cooling a fluid.

20.40.2. Attribute and Relationship Definitions

Property Name	Definition	Property Type	Data or Rel. Type	Min.	Max.	Default
CommonEquipmentProperties	Reference to the 'parent' SharedPropertySet (Pset_EquipmentCommon). Contains the shared values for this type -- of properties that are stored for all types of equipment.	IfcObjectReference	IfcGloballyUniqueId, Pset_EquipmentCommon	n/a	n/a	n/a
ChillerType	This enumeration defines the typical types of chillers (e.g., air-cooled, water-cooled, etc.)	IfcEnumeratedProperty	Pset_ChillerTypeEnum(AirCooled, WaterCooled, HeatRecovery, Other, NotKnown, Unset)			
NominalCoolingCapacity	Nominal cooling capacity of chiller at standardized conditions per ARI Standards 550-92, Centrifugal and	IfcSimplePropertyWithUnit	IfcReal, PowerUnit	see type	see type	0

Copyright © International Alliance for Interoperability - 1996-1999

	Rotary Screw Water-Chilling Packages, and ARI Standards 590-92, Positive Displacement Compressor (Data type = PowerMeasure)					
ThermalEfficiency	Coeficient of Performance defined as the ratio of cooling energy output to energy input under full load operating conditions per ARI Standards 550-92, Centrifugal and Rotary Screw Water-Chilling Packages, and ARI Standards 590-92, Positive Displacement C	IfcSimpleProperty	IfcReal	see type	see type	0
Refrigerant	Reference to Pset_Fluid property set for information about the properties of the refrigerant used by the Chiller.	IfcObjectReference	IfcGloballyUniqueId, Pset_Fluid	n/a	n/a	n/a
Compressors	Bag of references to IfcFlowEquipment objects of type Compressor that are used by the Chiller to perform work on the refrigerant.	IfcPropertyList	IfcObjectReference, IfcGloballyUniqueId, IfcFlowEquipment	n/a	n/a	n/a
Evaporator	Reference to an IfcFlowEquipment object of type TubeBundle which cointains information about the Evaporator TubeBundle	IfcObjectReference	IfcGloballyUniqueId, IfcFlowEquipment	n/a	n/a	n/a
Condensor	Reference to an IfcFlowEquipment object of type TubeBundle which cointains information about the Condenser TubeBundle	IfcObjectReference	IfcGloballyUniqueId, IfcFlowEquipment	n/a	n/a	n/a

20.41. PropertySet Pset_Coil

20.41.1. PropertySet Semantic Definition

Definition from IAI: Equipment used to provide heat transfer between non-mixing media. This is typically used in conjunction with an AirHandler or PackagedACUnit and uses a TubeBundle.

20.41.2. Attribute and Relationship Definitions

Property Name	Definition	Property Type	Data or Rel. Type	Min.	Max.	Default
CommonEquipment Properties	Reference to the 'parent' SharedPropertySet (Pset_EquipmentCommon). Contains the shared values for this type -- of properties that are stored for all types of equipment.	IfcObjectReference	IfcGloballyUniqueId, Pset_EquipmentCommon	n/a	n/a	n/a
CoilType	This enumeration defines typical types of coils (e.g.,	IfcEnumeratedProperty	Pset_CoilTypeEnum(PreCooling, Cooling, ReCooling,			

Copyright © International Alliance for Interoperability - 1996-1999

	Cooling, Heating, etc.)		PreHeating, Heating, ReHeating, Other, NotKnown, Unset)			
HeatTransferRate	Rate at which energy is transferred from one mediium to another (Data type = PowerMeasure)	IfcSimplePropertyWithUnit	IfcReal, PowerMeasure	see type	see type	0
TubeBundle	Reference to an IfcFlowEquipment object of type TubeBundle which cointains information about the Coil TubeBundle	IfcObjectReference	IfcGloballyUniqueId, IfcFlowEquipment	n/a	n/a	n/a
NumberOfRows	Number of tube rows in the coil assembly	IfcSimpleProperty	IfcInteger	see type	see type	1
TubeFlowArrangement	The configuration of flow through coil tubes	IfcSimpleProperty	IfcString	see type	see type	empty string
FinMaterial	Reference to a material used to construct the fins on a coil tube	IfcObjectReference	IfcMaterial	n/a	n/a	n/a
FinSpacing	Interval between the fins on a coil tube	IfcSimpleProperty	IfcLengthMeasure	see type	see type	0
BypassFactor	Coil bypass factor (Data type = PercentMeasure)	IfcSimplePropertyWithUnit	IfcReal, PercentMeasure	see type	see type	0
FaceVelocity	Air velocity through coil face (Data type = LinearVelocityMeasure)	IfcSimplePropertyWithUnit	IfcReal, LinearVelocityUnit	see type	see type	0

20.42. PropertySet Pset_Compressor

20.42.1. PropertySet Semantic Definition

Definition from IAI: Equipment that compresses a fluid typically used in a refrigeration circuit.

20.42.2. Attribute and Relationship Definitions

Property Name	Definition	Property Type	Data or Rel. Type	Min.	Max.	Default
CommonEquipmentProperties	Reference to the 'parent' SharedPropertySet (Pset_EquipmentCommon). Contains the shared values for this type -- of properties that are stored for all types of equipment.	IfcObjectReference	IfcGloballyUniqueId, Pset_EquipmentCommon	n/a	n/a	n/a
CompressorType	This enumeration defines the typical types of compressors (e.g., hermetic, reciprocating, etc.)	IfcEnumeratedProperty	Pset_CompressorTypeEnum(Hermetic, Reciprocating, Screw, Other, NotKnown, Unset)			
NominalCapacity	Nominal capacity of the compressor at standard conditions (Data type = PowerMeasure)	IfcSimplePropertyWithUnit	IfcReal, PowerUnit	see type	see type	0
ThermalEfficiency	Energy efficiency of compressor at standard	IfcSimplePropertyWithUnit	IfcReal, PercentMeasure	see type	see type	0

Copyright © International Alliance for Interoperability - 1996-1999

	operating conditions (Data type = PercentMeasure)					
Refrigerant	Reference to Pset_Fluid property set for information about the properties of the refrigerant used in the compressor	IfcObjectReference	IfcGloballyUniqueId, Pset_Fluid	n/a	n/a	n/a
HotGasBypass	Whether or not hot gas bypass is provided for the compressor. TRUE = Yes, FALSE = No.	IfcSimpleProperty	IfcBoolean	FALSE	TRUE	FALSE
Motor	Reference to an IfcEquipment object of type Motor which cointains information about the Compressor Motor.	IfcObjectReference	IfcGloballyUniqueId, IfcFlowEquipment	n/a	n/a	n/a

20.43. PropertySet Pset_Computer

20.43.1. Attribute and Relationship Definitions

Property Name	Definition	Property Type	Data or Rel. Type	Min.	Max.	Default
CommonElectricalAppliancePropertiesReference to the 'parent' SharedPropertySet (Pset_ElectricalApplianceCommon). Contains the shared values for this type -- properties that are stored for all types of ElectricalAppliances.	IfcObjectReference	IfcGloballyUniqueId, Pset_ElectricalApplianceCommon	n/a	n/a	n/a

20.44. PropertySet Pset_Convector

20.44.1. PropertySet Semantic Definition

Definition from IAI: Equipment which adds heat to a space utilizing natural convection.

20.44.2. Attribute and Relationship Definitions

Property Name	Definition	Property Type	Data or Rel. Type	Min.	Max.	Default
CommonEquipmentProperties	Reference to the 'parent' SharedPropertySet (Pset_EquipmentCommon). Contains the shared values for this type -- of properties that are stored for all types of equipment.	IfcObjectReference	IfcGloballyUniqueId, Pset_EquipmentCommon	n/a	n/a	n/a
Length	Nominal length of convector	IfcSimpleProperty	IfcLengthMeasure	see type	see type	0
HeatOutput	Nominal heat transfer rate of convector (Data type = PowerMeasure)	IfcSimplePropertyWithUnit	IfcReal, PowerUnit	see type	see type	0
FinConstruction	Material used for construction of convector tube fin	IfcSimpleProperty	IfcString	see type	see type	empty string

Copyright © International Alliance for Interoperability - 1996-1999

FinSize	Size of tube fins	IfcSimpleProperty	IfcLengthMeasure	see type	see type	0
FinSpacing	Interval between tube fins	IfcSimpleProperty	IfcLengthMeasure	see type	see type	0
EnclosureType	Nominal type of enclosure around convector	IfcSimpleProperty	IfcString	see type	see type	empty string
EnclosureConfiguration	Configuration of enclosure around convector	IfcSimpleProperty	IfcString	see type	see type	empty string

20.45. PropertySet Pset_CoolingTower

20.45.1. PropertySet Semantic Definition

Definition from IAI: Equipment which rejects heat to ambient air.

20.45.2. Attribute and Relationship Definitions

Property Name	Definition	Property Type	Data or Rel. Type	Min.	Max.	Default
CommonEquipmentProperties	Reference to the 'parent' SharedPropertySet (Pset_EquipmentCommon). Contains the shared values for this type -- of properties that are stored for all types of equipment.	IfcObjectReference	IfcGloballyUniqueId, Pset_EquipmentCommon	n/a	n/a	n/a
CoolingTowerType	This enumeration defines the typical types of cooling towers (e.g., OpenTower, ClosedTower, CrossFlow, etc.).	IfcEnumeratedProperty	Pset_CoolingTowerTypeEnum(OpenTower, ClosedTower, WoodFill, Ceramic, CrossFlow, Other, NotKnown, Unset)			
DesignWetBulbTemperature	Ambient wet bulb temperature used for selecting the cooling tower	IfcSimpleProperty	IfcThermodynamicTemperatureMeasure	see type	see type	0
DesignDryBulbTemperature	Ambient dry bulb temperature used for selecting the cooling tower	IfcSimpleProperty	IfcThermodynamicTemperatureMeasure	see type	see type	0
DesignEnteringWaterTemperature	Temperature of liquid entering the cooling tower	IfcSimpleProperty	IfcThermodynamicTemperatureMeasure	see type	see type	0
DesignLeavingWaterTemperature	Temperature of liquid leaving the cooling tower	IfcSimpleProperty	IfcThermodynamicTemperatureMeasure	see type	see type	0
WaterFlowRate	Design liquid flow rate through the cooling tower (Data type = VolumetricFlowrateMeasure)	IfcSimplePropertyWithUnit	IfcReal, VolumetricFlowrateUnit	see type	see type	0
AirFlowRate	Air flow rate through the cooling tower (Data type = VolumetricFlowrateMeasure)	IfcSimplePropertyWithUnit	IfcReal, VolumetricFlowrateUnit	see type	see type	0
Fans	Bag of one or more references to an IfcFlowEquipment object of type Fan that defines properties of any fan(s) that are used by the CoolingTower.	IfcPropertyList	IfcObjectReference, IfcGloballyUniqueId, IfcFlowEquipment	n/a	n/a	n/a

Copyright © International Alliance for Interoperability - 1996-1999

20.46. PropertySet Pset_Copier

20.46.1. Attribute and Relationship Definitions

Property Name	Definition	Property Type	Data or Rel. Type	Min.	Max.	Default
CommonElectricalAppliancePropertiesReference to the 'parent' SharedPropertySet (Pset_ElectricalApplianceCommon). Contains the shared values for this type -- properties that are stored for all types of ElectricalAppliances.	IfcObjectReference	IfcGloballyUniqueId, Pset_ElectricalApplianceCommon	n/a	n/a	n/a

20.47. PropertySet Pset_DistributionFluidFlow

20.47.1. Attribute and Relationship Definitions

Property Name	Definition	Property Type	Data or Rel. Type	Min.	Max.	Default
MaximumFlowrate	Maximum fluid flowrate through all the inlets for the distribution flow element (Data type = VolumetricFlowrateMeasure)	IfcSimplePropertyWithUnit	IfcReal, VolumetricFlowrateUnit	see type	see type	0
DesignFlowrate	Design fluid flowrate through all the inlets for the distribution flow element (Data type = VolumetricFlowrateMeasure)	IfcSimplePropertyWithUnit	IfcReal, VolumetricFlowrateUnit	see type	see type	0
MinimumFlowrate	Minimum fluid flowrate through all the inlets for the distribution flow element (Data type = VolumetricFlowrateMeasure)	IfcSimplePropertyWithUnit	IfcReal, VolumetricFlowrateUnit	see type	see type	0
PressureLoss	Pressure loss or drop through the distribution flow element at the MaximumFlowrate. (Data type = PressureMeasure)	IfcSimplePropertyWithUnit	IfcReal, PressureUnit	see type	see type	0
WorkingPressure	The actual working pressure at the primary inlet for the distribution flow element. (Data type = PressureMeasure)	IfcSimplePropertyWithUnit	IfcReal, PressureUnit	see type	see type	0
DesignPressureRating	The design pressure rating for the distribution flow element. (Data type = PressureMeasure)	IfcSimplePropertyWithUnit	IfcReal, PressureUnit	see type	see type	0

Copyright © International Alliance for Interoperability - 1996-1999

20.48. PropertySet Pset_DuctDesignCriteria

20.48.1. PropertySet Semantic Definition

Definition from IAI: This property set is used to define the general characteristics of the duct design parameters. This property set is typically attached to an instance of an IfcSystem, however, it may also be attached to individual elements within a duct distribution system where individual design parameters overrule those of the system. Related property sets include Pset_Fluid and Pset_Insulation.

20.48.2. Attribute and Relationship Definitions

Property Name	Definition	Property Type	Data or Rel. Type	Min.	Max.	Default
DesignName	A name for the design values	IfcSimpleProperty	IfcString	see type	see type	empty string
DuctSizingMethod	Enumeration that identifies the methodology to be used to size system components	IfcEnumeratedProperty	Pset_DuctSizingMethodEnum (ConstantFriction, ConstantPressure, StaticRegain, Other, NotKnown, Unset)			
PressureClass	Nominal pressure rating of the system components. (Data type = PressureMeasure)	IfcSimplePropertyWithUnit	IfcReal, PressureUnit	see type	see type	0
LeakageClass	Nominal leakage rating for the system components. (Data type = PressureMeasure)	IfcSimplePropertyWithUnit	IfcReal, PressureUnit	see type	see type	0
FrictionLoss	The pressure loss due to friction per unit length. (Data type = PressureMeasure/LengthMeasure)	IfcSimplePropertyWithUnit	IfcReal, PressureUnit/LengthUnit	see type	see type	0
LiningType	The insulating lining type to be used	IfcObjectReference	IfcGloballyUniqueId, Pset_Insulation	n/a	n/a	NIL
InsulationType	The insulation type to be used	IfcObjectReference	IfcGloballyUniqueId, Pset_Insulation	n/a	n/a	NIL
ScrapFactor	Sheet metal scrap factor	IfcSimpleProperty	IfcReal	see type	see type	0
DuctSealant	Type of sealant used on the duct and fittings	IfcSimpleProperty	IfcString	see type	see type	empty string
MaximumVelocity	The maximum design velocity of the air in the duct or fitting. (Data type = LinearVelocityMeasure)	IfcSimplePropertyWithUnit	IfcReal, LinearVelocityUnit	see type	see type	0
AspectRatio	The default aspect ratio	IfcSimpleProperty	IfcReal	see type	see type	0
MinimumHeight	The minimum duct height for rectangular, oval or round duct	IfcSimpleProperty	IfcLengthMeasure	see type	see type	0
MinimumWidth	The minimum duct width for oval or rectangular duct	IfcSimpleProperty	IfcLengthMeasure	see type	see type	0

Copyright © International Alliance for Interoperability - 1996-1999

20.49. PropertySet Pset_DuctFitting

20.49.1. PropertySet Semantic Definition

Definition from IAI: This property set is used to define the characteristics of a duct fitting. Related property sets include Pset_DuctDesignCriteria.

20.49.2. Attribute and Relationship Definitions

Property Name	Definition	Property Type	Data or Rel. Type	Min.	Max.	Default
FittingSubType	Subtype of fitting (i.e., 5-gore, pleated, stamped, etc.)	IfcSimpleProperty	IfcString	see type	see type	empty string

20.50. PropertySet Pset_DuctSegment

20.50.1. PropertySet Semantic Definition

Definition from IAI: This property set is used to define the characteristics of a duct segment. Related property sets include Pset_DuctDesignCriteria.

20.50.2. Attribute and Relationship Definitions

Property Name	Definition	Property Type	Data or Rel. Type	Min.	Max.	Default
FinishedLength	The finished length of the duct segment	IfcSimpleProperty	IfcLengthMeasure	see type	see type	0
LongitudinalSeam	The type of seam to be used along the longitudinal axis of the duct segment	IfcSimpleProperty	IfcString	see type	see type	empty string
Reinforcement	The type of reinforcement used for the duct segment	IfcSimpleProperty	IfcString	see type	see type	empty string
ReinforcementSpacing	The spacing between reinforcing elements	IfcSimpleProperty	IfcLengthMeasure	see type	see type	0

20.51. PropertySet Pset_DuctSystemDesignCriteria

20.51.1. PropertySet Semantic Definition

Definition from IAI: This property set is used to define the general characteristics of the duct system and is typically attached to an instance of an IfcSystem. Related property sets include Pset_Fluid and Pset_Insulation.

20.51.2. Attribute and Relationship Definitions

Property Name	Definition	Property Type	Data or Rel. Type	Min.	Max.	Default
DuctSystemType	Enumeration that identifies the type of system	IfcEnumeratedProperty	Pset_DuctSystemTypeEnum(VariableAirVolume, ConstantVolume, DoubleDuct, Other, NotKnown, Unset)			
SystemDescription	System description	IfcSimpleProperty	IfcString	see type	see type	empty

Copyright © International Alliance for Interoperability - 1996-1999

						string
SystemLocation	Physical description of the part of the building the system serves	IfcSimpleProperty	IfcString	see type	see type	empty string

20.52. PropertySet Pset_ElectricalApplianceCommon

20.52.1. Attribute and Relationship Definitions

Property Name	Definition	Property Type	Data or Rel. Type	Min.	Max.	Default
Description	String description of the configuration for this appliance type. Note: name is included in the TypeDefinition.	IfcSimpleProperty	IfcString	see type	see type	empty string
AssetInformation	Reference to an OccurrencePropertySet (Pset_Asset) containing Information about this asset. This property set will be attached to the subject object - in the list of OccurrencePropertysets defined in the IfcObject supertype.	IfcObjectReference	IfcGloballyUniqueId, Pset_Asset	n/a	n/a	n/a
ManufactureInformation	Reference to property set Pset_ManufactureInformation, which defines information about the manufacture of this appliance.	IfcObjectReference	IfcGloballyUniqueId, IfcManufactureInformation	n/a	n/a	n/a
ElectricalCharacteristics	Reference to an OccurrencePropertySet (Pset_ElectricalCharacteristics) containing information about the electrical requirements for this Electrical Appliance. This property set will be attached to the subject object - in the list of OccurrencePropertysets defined in the IfcObject supertype.	IfcObjectReference	IfcGloballyUniqueId, IfcElectricalCharacteristics	n/a	n/a	n/a
MaintenanceInformation	References to IfcMaintenanceRecord objects containing maintenance history	IfcPropertyList	IfcObjectReference, IfcGloballyUniqueId, IfcMaintenanceRecord	n/a	n/a	NIL

20.53. PropertySet Pset_ElectricalFixtureCommon

20.53.1. Attribute and Relationship Definitions

Property Name	Definition	Property Type	Data or Rel. Type	Min.	Max.	Default
Description	Description of this fixture type. Note: name is included in the	IfcSimpleProperty	IfcString	see type	see type	empty string

Copyright © International Alliance for Interoperability - 1996-1999

	TypeDefinition.					
AssetInformation	Reference to an OccurrencePropertySet (Pset_Asset) containing Information about this asset. This property set will be attached to the subject object - in the list of OccurrencePropertysets defined in the IfcObject supertype.	IfcObjectReference	IfcGloballyUniqueId, Pset_Asset	n/a	n/a	n/a
ManufactureInformation	Reference to property set Pset_ManufactureInformation, which defines information about the manufacture of this fixture.	IfcObjectReference	IfcGloballyUniqueId, IfcManufactureInformation	n/a	n/a	n/a
ElectricalCharacteristics	Reference to an OccurrencePropertySet (Pset_ElectricalCharacteristics) containing information about the electrical requirements for this fixture. This property set will be attached to the subject object - in the list of OccurrencePropertysets defined in the IfcObject supertype.	IfcObjectReference	IfcGloballyUniqueId, IfcElectricalCharacteristics	n/a	n/a	n/a
MaintenanceInformation	References to IfcMaintenanceRecord objects containing maintenance history	IfcPropertyList	IfcObjectReference, IfcGloballyUniqueId, IfcMaintenanceRecord	n/a	n/a	NIL

20.54. PropertySet Pset_ElementAccess

20.54.1. Attribute and Relationship Definitions

Property Name	Definition	Property Type	Data or Rel. Type	Min.	Max.	Default
AccessSpaceRequired	Space required to service this element	IfcObjectReference	IfcGloballyUniqueId, IfcSpace	n/a	n/a	n/a
SupplySpaceRequired	Space adjacent to the element used to reach the access space	IfcObjectReference	IfcGloballyUniqueId, IfcSpace	n/a	n/a	n/a

20.55. PropertySet Pset_Elevator

20.55.1. Attribute and Relationship Definitions

Property Name	Definition	Property Type	Data or Rel. Type	Min.	Max.	Default
CommonEquipmentProperties	Reference to a SharedPropertySet (Pset_EquipmentCommon) which defines properties that	IfcObjectReference	IfcGloballyUniqueId, Pset_EquipmentCommon	n/a	n/a	NIL

Copyright © International Alliance for Interoperability - 1996-1999

	are stored for all types of equipment.					
Occupancy	Number of occupants	IfcSimpleProperty	IfcInteger	0	see type	0
ManufactureInformation	reference to Pset_ManufactureInformation	IfcObjectReference	IfcGloballyUniqueId, IfcManufactureInformation	n/a	n/a	NIL
LoadCapacity	Weight capacity of elevator	IfcSimpleProperty	IfcMassMeasure	see type	see type	0
ClientBrief	Reference to program to gain requirements for occupancy	IfcObjectReference	IfcGloballyUniqueId, IfcSpaceProgram	n/a	n/a	NIL

20.56. PropertySet Pset_EquipmentCommon

20.56.1. Attribute and Relationship Definitions

Property Name	Definition	Property Type	Data or Rel. Type	Min.	Max.	Default
Description	String description of the configuration for this equipment type. Note: name is included in the TypeDefinition.	IfcSimpleProperty	IfcString	see type	see type	empty string
OccurenceInformation	Reference to an OccurrencePropertySet (Pset_EquipmentOccurrence) containing information stored for all types of equipment. This property set will be attached to the subject object - in the list of OccurrencePropertysets defined in the IfcObject supertype.	IfcObjectReference	IfcGloballyUniqueId, Pset_EquipmentOccurence	n/a	n/a	n/a
ManufactureInformation	Reference to property set Pset_ManufactureInformation, which defines information about the manufacture of this equipment.	IfcObjectReference	IfcGloballyUniqueId, IfcManufactureInformation	n/a	n/a	n/a
AccessSpace	Reference to an OccurrencePropertySet (Pset_ElementAccess) containing information describing access space required for this equipment. This property set will be attached to the subject object - in the list of OccurrencePropertysets defined in the IfcObject supertype.	IfcObjectReference	IfcGloballyUniqueId, Pset_ElementAccess	n/a	n/a	n/a
MaintenanceInformation	References to IfcMaintenanceRecord objects containing maintenance history	IfcPropertyList	IfcObjectReference, IfcGloballyUniqueId, IfcMaintenanceRecord	n/a	n/a	NIL
ElectricalCharacteristics	Reference to an OccurrencePropertySet (Pset_ElectricalCharacteristic	IfcObjectReference	IfcGloballyUniqueId, IfcElectricalCharacteristics	n/a	n/a	n/a

Copyright © International Alliance for Interoperability - 1996-1999

	s) containing information about the electrical requirements for this equipment. This property set will be attached to the subject object - in the list of OccurrencePropertysets defined in the IfcObject supertype.					

20.57. PropertySet Pset_EquipmentOccurence

20.57.1. Attribute and Relationship Definitions

Property Name	Definition	Property Type	Data or Rel. Type	Min.	Max.	Default
TagIdentifier	User-Defined identifier for this equipment instance	IfcSimpleProperty	IfcString	see type	see type	empty string

20.58. PropertySet Pset_Escalator

20.58.1. Attribute and Relationship Definitions

Property Name	Definition	Property Type	Data or Rel. Type	Min.	Max.	Default
CommonEquipment Properties	Reference to a SharedPropertySet (Pset_EquipmentCommon) which defines properties that are stored for all types of equipment.	IfcObjectReference	IfcGloballyUniqueId, Pset_EquipmentCommon	n/a	n/a	NIL
Capacity	number of people that can be moved from the top to the bottom	IfcSimpleProperty	IfcInteger	0	see type	0
ManufactureInform ation	reference to Pset_ManufactureInformation	IfcObjectReference	IfcGloballyUniqueId, IfcManufactureInformation	n/a	n/a	NIL
ClientBrief	Link to program to gain requirements for occupancy	IfcObjectReference	IfcGloballyUniqueId, IfcSpaceProgram	n/a	n/a	NIL

20.59. PropertySet Pset_Facsimile

20.59.1. Attribute and Relationship Definitions

Property Name	Definition	Property Type	Data or Rel. Type	Min.	Max.	Default
CommonElectricalA ppliance Properties	Reference to the 'parent' SharedPropertySet (Pset_ElectricalApplianceCo mmon). Contains the shared values for this type -- properties that are stored for all types of ElectricalAppliances.	IfcObjectReference	IfcGloballyUniqueId, Pset_ElectricalApplianceCom mon	n/a	n/a	n/a

Copyright © International Alliance for Interoperability - 1996-1999

20.60. PropertySet Pset_Fan

20.60.1. PropertySet Semantic Definition

Definition from IAI: Equipment which imparts mechanical work on a gas.

20.60.2. Attribute and Relationship Definitions

Property Name	Definition	Property Type	Data or Rel. Type	Min.	Max.	Default
CommonEquipmentProperties	Reference to the 'parent' SharedPropertySet (Pset_EquipmentCommon). Contains the shared values for this type -- of properties that are stored for all types of equipment.	IfcObjectReference	IfcGloballyUniqueId, Pset_EquipmentCommon	n/a	n/a	n/a
AirFlowType	This enumeration defines the basic flow function that the fan performs (e.g., supply, return, exhaust, etc.).	IfcEnumeratedProperty	Pset_AirFlowTypeEnum(Supply, Return, Exhaust, Other, NotKnown, Unset)			
FluidMover	Reference to the Pset_FluidMover property set which contains fluid flow characteristics for the fan	IfcObjectReference	IfcGloballyUniqueId, Pset_FluidMover	n/a	n/a	n/a
StaticPressure	The static amount of pressure within the air stream system that the fan must overcome to insure designed circulation of air (Note that this is different from the total pressure contained in IfcFluidMover) (Data type = PressureMeasure)	IfcSimplePropertyWithUnit	IfcReal, PressureUnit	see type	see type	0
FanPressureClass	This enumeration defines the Pressure Class of the fan used for identifying the thickness and types of materials required for the construction of the fan assembly.	IfcEnumeratedProperty	Pset_FanPressureClassEnum (Class1, Class2, Class3, Class4, Other, NotKnown, Unset)			
MinimumTemperature	The minimum design temperature of the air passing through the fan	IfcSimpleProperty	IfcThermodynamicTemperatureMeasure	see type	see type	0
MaximumTemperature	The maximum design temperature of the air passing through the fan	IfcSimpleProperty	IfcThermodynamicTemperatureMeasure	see type	see type	0
FanWheelType	This enumeration defines the types of wheels typically utilized in fans.	IfcEnumeratedProperty	Pset_FanWheelTypeEnum(ForwardCurved, BackwardCurved, AirFoil, Propeller,VaneAxial, Plug, Other, NotKnown, Unset)			
WheelConstruction	The material used to construct the fan wheel	IfcObjectReference	IfcMaterial	n/a	n/a	NIL
WheelTipSpeed	The linear speed of the tip of the fan blade furthest from the	IfcSimplePropertyWithUnit	IfcReal, LinearVelocityUnit	0	see type	0

Copyright © International Alliance for Interoperability - 1996-1999

	shaft (Data type = LinearVelocityMeasure)					
HousingConstruction	The material used to construct the fan housing	IfcObjectReference	IfcMaterial	n/a	n/a	NIL
DischargeVelocity	The speed at which air discharges from the fan through the fan housing discharge opening (Data type = LinearVelocityMeasure)	IfcSimplePropertyWithUnit	IfcReal, LinearVelocityUnit	see type	see type	0
DischargePressureLoss	Fan discharge pressure losses associated with the discharge arrangement (Data type = PressureMeasure)	IfcSimplePropertyWithUnit	IfcReal, PressureUnit	see type	see type	0
FanDischarge	This enumeration identifies the types of discharge arrangements from the fan housing discharge opening, which is used to determine the DischargePressureLoss	IfcEnumeratedProperty	Pset_FanDischargeEnum(Duct, Screen, None, Other, NotKnown, Unset)			
FanArrangement	This enumeration identifies the types of fan arrangements for centrifugal fans.	IfcEnumeratedProperty	Pset_FanArrangementEnum(TopHorizontal, TopAngularDown, DownBlast, BottomAngularDown, BottomHorizontal, BottomAngularUp, UpBlast, TopAngularUp, Other, NotKnown, Unset)			
FanRotation	This enumeration defines the types of fan rotation for centrifugal fans.	IfcEnumeratedProperty	Pset_FanRotationEnum(Clockwise, CounterClockwise, Other, NotKnown, Unset)			
FanDriveArrangement	This enumeration defines the fan and motor drive arrangement as defined by AMCA.	IfcEnumeratedProperty	Pset_FanDriveArrangementEnum(Arrangement1, Arrangement2, Arrangement3, Arrangement4, Arrangement5, Arrangement6, Arrangement7, Arrangement8, Arrangement9, Arrangement10, Other, NotKnown, Unset)			
DrivePowerLoss	Fan drive power losses associated with the type of connection between the motor and the fan wheel (Data type = PowerMeasure)	IfcSimplePropertyWithUnit	IfcReal, PowerUnit	see type	see type	0
MotorDriveType	This enumeration identifies the type of connection between the motor shaft and the fan wheel.	IfcEnumeratedProperty	Pset_MotorDriveTypeEnum(DirectDrive, BeltDrive, Coupling, Other, NotKnown, Unset)			
DriveInAirstream	Boolean value to identify if the fan drive is in the airstream. TRUE = Yes, FALSE = No.	IfcSimpleProperty	IfcBoolean	FALSE	TRUE	FALSE
FanMountingType	This enumeration identifies different methods of mounting	IfcEnumeratedProperty	Pset_FanMountingTypeEnum(ManufacturedCurb,			

Copyright © International Alliance for Interoperability - 1996-1999

	a fan in a building.		FieldErectedCurb, ConcretePad, Suspended, Other, NotKnown, Unset)			
SoundPowerLevel	Reference to a property set Pset_SoundPowerLevels which contains sound power level data	IfcObjectReference	IfcGloballyUniqueId, Pset_SoundPressureLevels	n/a	n/a	n/a
Motor	Reference to an IfcEquipment object of type Motor which cointains information about the Fan Motor.	IfcObjectReference	IfcGloballyUniqueId, IfcFlowEquipment	n/a	n/a	NIL

20.61. PropertySet Pset_Faucet

20.61.1. Attribute and Relationship Definitions

Property Name	Definition	Property Type	Data or Rel. Type	Min.	Max.	Default
CommonPlumbingFixtureProperties	Reference to the SharedPropertySet (Pset_PlumbingFixtureCommon). Contains the shared values for this type -- of properties that are stored for all types of Plumbing Fixtures.	IfcObjectReference	IfcGloballyUniqueId, Pset_PlumbingFixtureCommon	n/a	n/a	NIL

20.62. PropertySet Pset_Fluid

20.62.1. PropertySet Semantic Definition

Definition from IAI: A fluid typically utilized within HVAC systems.

20.62.2. Attribute and Relationship Definitions

Property Name	Definition	Property Type	Data or Rel. Type	Min.	Max.	Default
Name	The name of the fluid	IfcSimpleProperty	IfcString	see type	see type	empty string
Description	A description of the fluid	IfcSimpleProperty	IfcString	see type	see type	empty string
BoilingPoint	The boiling point of the fluid	IfcSimpleProperty	IfcThermodynamicTemperatureMeasure	see type	see type	0
FreezingPoint	The freezing point of the fluid	IfcSimpleProperty	IfcThermodynamicTemperatureMeasure	see type	see type	0
Density	The density of the fluid (Data type = MassDensityMeasure)	IfcSimplePropertyWithUnit	IfcReal, MassDensityUnit	see type	see type	0
Viscosity	The viscosity of the fluid (Data type = DynamicViscosityMeasure)	IfcSimplePropertyWithUnit	IfcReal, DynamicViscosityUnit	see type	see type	0
HeatCapacity	The heat capacity of the fluid (Data type = HeatCapacityMeasure)	IfcSimplePropertyWithUnit	IfcReal, HeatCapacityMeasure	see type	see type	0
LatentHeat	The latent heat of the fluid	IfcSimplePropertyW	IfcReal, LatentHeatMeasure	see type	see type	0

Copyright © International Alliance for Interoperability - 1996-1999

	(Data type = LatentHeatMeasure)	ithUnit				

20.63. PropertySet Pset_FluidMover

20.63.1. PropertySet Semantic Definition

Definition from IAI: A fluid mover is equipment that imparts mechanical work on a fluid (e.g., pump, fan).

20.63.2. Attribute and Relationship Definitions

Property Name	Definition	Property Type	Data or Rel. Type	Min.	Max.	Default
Fluid	Reference to the Pset_Fluid property set which contains information about the fluid	IfcObjectReference	IfcGloballyUniqueId, Pset_Fluid	n/a	n/a	n/a
FluidFlowrate	Nominal fluid flow rate (Data type = VolumetricFlowrateMeasure)	IfcSimplePropertyWithUnit	IfcReal, VolumetricFlowrateUnit	see type	see type	0
WorkingPressure	Working total pressure differential (Data type = PressureMeasure)	IfcSimplePropertyWithUnit	IfcReal, PressureUnit	see type	see type	0
OperatingEfficiency	Operating efficiency of the fluid mover at the design flow rate (Data type = PercentMeasure)	IfcSimplePropertyWithUnit	IfcReal, PercentMeasure	see type	see type	0
MinimumEfficiency	Minimum efficiency of the fluid mover throughout the operating range (Data type = PercentMeasure)	IfcSimplePropertyWithUnit	IfcReal, PercentMeasure	see type	see type	0
OperatingPower	Power input at rated performance (Data type = PowerMeasure)	IfcSimplePropertyWithUnit	IfcReal, PowerUnit	see type	see type	0
MaximumPower	Maximum power input (Data type = PowerMeasure)	IfcSimplePropertyWithUnit	IfcReal, PowerUnit	see type	see type	0
Speed	Rotational speed of the fluid mover. (Data type = RotationalFrequencyMeasure)	IfcSimplePropertyWithUnit	IfcReal, RotationalFrequencyUnit	see type	see type	0

20.64. PropertySet Pset_GutterSegment

20.64.1. Attribute and Relationship Definitions

Property Name	Definition	Property Type	Data or Rel. Type	Min.	Max.	Default
ManufactureInformation	reference to Manufacturer information	IfcObjectReference	IfcGloballyUniqueId, IfcManufactureInformation	n/a	n/a	NIL
Slope	Angle of the gutter to allow for drainage	IfcSimpleProperty	IfcPlaneAngleMeasure	0	see type	0
FlowRating	Actual flow capacity for the gutter. Value of 0.00 means this value has not been set.	IfcSimplePropertyWithUnit	IfcReal, VolumetricFlowrateUnit	0	see type	0

Copyright © International Alliance for Interoperability - 1996-1999

	(Data type = VolumetricFlowrateMeasure)					
ConstructionDetail	References to construction detail drawings	IfcPropertyList	IfcObjectReference, IfcDocumentReference	n/a	n/a	NIL
SpecifcationSection	References to specification sections	IfcPropertyList	IfcObjectReference, IfcDocumentReference	n/a	n/a	NIL

20.65. PropertySet Pset_HeatExchanger

20.65.1. PropertySet Semantic Definition

Definition from IAI: Equipment used to provide heat transfer between non-mixing media such as both plate and shell and tube heat exchangers.

20.65.2. Attribute and Relationship Definitions

Property Name	Definition	Property Type	Data or Rel. Type	Min.	Max.	Default
CommonEquipmentProperties	Reference to the 'parent' SharedPropertySet (Pset_EquipmentCommon). Contains the shared values for this type -- of properties that are stored for all types of equipment.	IfcObjectReference	IfcGloballyUniqueId, Pset_EquipmentCommon	n/a	n/a	n/a
HeatExchangerType	This enumeration identifies the basic types of heat exchangers (e.g., plate, shell and tube, etc.).	IfcEnumeratedProperty	Pset_HeatExchangerTypeEnum(Plate, ShellAndTube, Other, NotKnown, Unset)			
HeatExchangerArrangement	This enumeration identifies the basic flow arrangements for the heat exchanger (e.g., Counterflow, Crossflow, etc.).	IfcEnumeratedProperty	Pset_HeatExchangerArrangementEnum(CounterFlow, CrossFlow, ParallelFlow, MultiPass, Other, NotKnown, Unset)			
HeatTransferRate	Rate at which energy is transferred from one mediium to another (Data type = PowerMeasure)	IfcSimplePropertyWithUnit	IfcReal, PowerUnit	see type	see type	0
TubeBundle	Reference to an IfcFlowEquipment object of type TubeBundle which cointains information about the Heat Exchanger TubeBundle	IfcObjectReference	IfcGloballyUniqueId, IfcFlowEquipment	n/a	n/a	n/a
PlateMaterial	Referenct to a material used to construct the plates in a Plate Heat Exchanger	IfcObjectReference	IfcMaterial	n/a	n/a	n/a
NumberOfPlates	Number of plates used for the plate and frame heat exchanger	IfcSimpleProperty	IfcInteger	see type	see type	0

Copyright © International Alliance for Interoperability - 1996-1999

20.66. PropertySet Pset_Insulation

20.66.1. PropertySet Semantic Definition

Definition from IAI: Materials with low heat conductance.

20.66.2. Attribute and Relationship Definitions

Property Name	Definition	Property Type	Data or Rel. Type	Min.	Max.	Default
InsulationType	This enumeration defines different types of insulation (i.e., InorganicFibrous, InorganicCellular, OrganicFibrous, OrganicCellular, etc.) as defined by ASHRAE 1997 Fundamenatals Section 22.2 Basic Materials.	IfcEnumeratedProperty	Pset_InsulationTypeEnum(InorganicFibrous, InorganicCellular, OrganicFibrous, OrganicCellular, Metallic,MetallizedOrganicReflectiveMembranes, Other, NotKnown, Unset)			
Thickness	Insulation Thickness	IfcSimpleProperty	IfcLengthMeasure	see type	see type	0
Density	Insulation density (Data type = MassDensityMeasure)	IfcSimplePropertyWithUnit	IfcReal, MassDensityUnit	see type	see type	0
SpecificHeat	Specific heat of the insulation (Data type = SpecificHeatMeasure)	IfcSimplePropertyWithUnit	IfcReal, SpecificHeatMeasure	see type	see type	0
JacketType	Jacket material type of the insulation	IfcObjectReference	IfcMaterial	n/a	n/a	n/a
FlamabilityRating	Insulation flammability rating	IfcSimpleProperty	IfcString	see type	see type	empty string
ThermalResistance	Insulation thermal resistance or R-Value (Data type = ThermalResistanceMeasure)	IfcSimplePropertyWithUnit	IfcReal, ThermalResistanceUnit	see type	see type	0

20.67. PropertySet Pset_LightFixture

20.67.1. Attribute and Relationship Definitions

Property Name	Definition	Property Type	Data or Rel. Type	Min.	Max.	Default
CommonElectricalFixtureProperties	Reference to the SharedPropertySet (Pset_ElectricalFixtureCommon). Contains the shared values for this type -- of properties that are stored for all types of Electrical Fixtures.	IfcObjectReference	IfcGloballyUniqueId, Pset_ElectricalFixtureCommon	n/a	n/a	NIL

20.68. PropertySet Pset_LightingThermalProperties

20.68.1. PropertySet Semantic Definition

Definition from IAI: Information about light fixtures which contribute to thermal loads.

Copyright © International Alliance for Interoperability - 1996-1999

20.68.2. Attribute and Relationship Definitions

Property Name	Definition	Property Type	Data or Rel. Type	Min.	Max.	Default
Description	Additional information about the light fixture that might be useful to the HVAC design	IfcSimpleProperty	IfcString	see type	see type	empty string
MaximumSpaceSensibleLoad	Maximum or Peak sensible thermal load contributed to the conditioned space by the light fixture (Data type = PowerMeasure)	IfcSimplePropertyWithUnit	IfcReal, PowerUnit	see type	see type	0
MaximumPlenumSensibleLoad	Maximum or Peak sensible thermal load contributed to return air plenum by the light fixture (Data type = PowerMeasure)	IfcSimplePropertyWithUnit	IfcReal, PowerUnit	see type	see type	0
SensibleLoadToRadiant	Percent of sensible thermal load to radiant heat (Data type = PercentMeasure)	IfcSimplePropertyWithUnit	IfcReal, PercentMeasure	see type	see type	0

20.69. PropertySet Pset_LoadDesignCriteria

20.69.1. PropertySet Semantic Definition

Definition from IAI: Building thermal load design data such as occupancy, appliance, and lighting criteria that are used for calculating thermal loads in a space or building.

20.69.2. Attribute and Relationship Definitions

Property Name	Definition	Property Type	Data or Rel. Type	Min.	Max.	Default
OccupancyType	This enumeration identifies types of occupancy or space usage (e.g., Theater, Office, Hotel, Apartment, etc.) as defined by Table 3, Chapter 28, of the 1997 ASHRAE Handbook of Fundamentals.	IfcEnumeratedProperty	Pset_OccupancyTypeEnum (Theater, Office, Hotel, Apartment, RetailStore, DrugStore, Bank, Restaurant, Factory, DanceHall, BowlingAlley, Gymnasium, Other, NotKnown, Unset)			
AreaPerPerson	Design occupancy loading for this type of usage	IfcSimpleProperty	IfcAreaMeasure	see type	see type	0
PeopleSensibleLoad	Sensible thermal load contributed per person (Data type = PowerMeasure)	IfcSimplePropertyWithUnit	IfcReal, PowerUnit	see type	see type	0
PeopleLatentLoad	Latent thermal load contributed per person (Data type = PowerMeasure)	IfcSimplePropertyWithUnit	IfcReal, PowerUnit	see type	see type	0
PeopleSensibleLoadToRadiant	Percent of sensible thermal load contributed by people to radiant heat (Data type = PercentMeasure)	IfcSimplePropertyWithUnit	IfcReal, PercentMeasure	see type	see type	0
OccupancyDiversity	Diversity factor that may be	IfcSimplePropertyW	IfcReal, PercentMeasure	see type	see type	0

Copyright © International Alliance for Interoperability - 1996-1999

	applied to the number of people in the space (Data type = PercentMeasure)	ithUnit				
OutsideAirPerPerson	Design quantity of outside air to be provided per person in the space (Data type = VolumetricFlowrateMeasure)	IfcSimplePropertyWithUnit	IfcReal, VolumetricFlowrateUnit	see type	see type	0
ReceptacleLoadIntensity	Average power use intensity of appliances and other non-HVAC equipment.in the space per unit area.	IfcSimplePropertyWithUnit	IfcReal, PowerMeasure/IfcAreaMeasure			
AppliancePercentLoadToRadiant	Percent of sensible load to radiant heat (Data type = PercentMeasure)	IfcSimplePropertyWithUnit	IfcReal, PercentMeasure	see type	see type	0
LightingLoadIntensity	Average lighting load intensity in the space per unit area	IfcSimplePropertyWithUnit	IfcReal, PowerMeasure/IfcAreaMeasure			
LightingPercentLoadToReturnAir	Percent of lighting load to the return air plenum (Data type = PercentMeasure)	IfcSimplePropertyWithUnit	IfcReal, PercentMeasure	see type	see type	0

20.70. PropertySet Pset_Material

20.70.1. PropertySet Semantic Definition

Definition from IAI: Thermal properties of a material.

20.70.2. Attribute and Relationship Definitions

Property Name	Definition	Property Type	Data or Rel. Type	Min.	Max.	Default
SpecificMass	Specific mass of a material (Data type = MassDensityMeasure)	IfcSimplePropertyWithUnit	IfcReal, MassDensityUnit	see type	see type	0
SpecificHeat	Sepecific heat of a material (Data type = SpecificHeatMeasure)	IfcSimplePropertyWithUnit	IfcReal, SpecificHeatMeasure	see type	see type	0
ThermalTransmittanceCoefficient	Thermal transmittance coefficient (U-Value) of a material (Data type = ThermalTransmittanceMeasure)	IfcSimplePropertyWithUnit	IfcReal, IfcThermalTransmittanceMeasure	see type	see type	0

20.71. PropertySet Pset_Motor

20.71.1. PropertySet Semantic Definition

Definition from IAI: Equipment used to convert electrical power to rotational mechanical power.

Copyright © International Alliance for Interoperability - 1996-1999

20.71.2. Attribute and Relationship Definitions

Property Name	Definition	Property Type	Data or Rel. Type	Min.	Max.	Default
CommonEquipment Properties	Reference to the 'parent' SharedPropertySet (Pset_EquipmentCommon). Contains the shared values for this type -- of properties that are stored for all types of equipment.	IfcObjectReference	IfcGloballyUniqueId, Pset_EquipmentCommon	n/a	n/a	n/a
Speed	Rate of rotation of the motor shaft: a measurement of revolutions per period of time (Data type = RotationalFrequencyMeasure)	IfcSimplePropertyWithUnit	IfcReal, RotationalFrequencyUnit	see type	see type	0
Efficiency	Elelctrical efficiency of the motorper NEMA Standards MG10 and MG11. (Data type = PercentMeasure)	IfcSimplePropertyWithUnit	IfcReal, PercentMeasure	see type	see type	0
PowerOutput	Nominal electrical power output of the motor per NEMA Standards MG10 and MG11. (Data type = PowerMeasure)	IfcSimplePropertyWithUnit	IfcReal, PowerUnit	see type	see type	0
FrameConfiguration	Motor frame designation	IfcSimpleProperty	IfcString	see type	see type	empty string
InsulationRating	Nominal rating of the motor wiring insulation	IfcSimpleProperty	IfcString	see type	see type	empty string
MotorHousingType	This enumeration identifies whether the motor housing is sealed or open.	IfcEnumeratedProperty	Pset_MotorHousingTypeEnum(Sealed, Open, Other, NotKnown, Unset)			
MotorWindingType	This enumeration identifyies the type of winding used for the motor.	IfcEnumeratedProperty	Pset_MotorWindingTypeEnum(Synchronous, Asynchronous, SeriesWound, ParallelWound, Other, NotKnown, Unset)			

20.72. PropertySet Pset_OutsideDesignCriteria

20.72.1. PropertySet Semantic Definition

Definition from IAI: Outside air conditions used as the basis for calculating thermal loads at peak conditions.

20.72.2. Attribute and Relationship Definitions

Property Name	Definition	Property Type	Data or Rel. Type	Min.	Max.	Default
HeatingDryBulb	Outside dry bulb temperature for heating design	IfcSimpleProperty	IfcThermodynamicTemperatureMeasure	see type	see type	0
HeatingWetBulb	Outside wet bulb temperature for heating design	IfcSimpleProperty	IfcThermodynamicTemperatureMeasure	see type	see type	0
CoolingDryBulb	Outside dry bulb temperature for cooling design	IfcSimpleProperty	IfcThermodynamicTemperatureMeasure	see type	see type	0
CoolingWetBulb	Outside wet bulb temperature for cooling design	IfcSimpleProperty	IfcThermodynamicTemperatureMeasure	see type	see type	0

Copyright © International Alliance for Interoperability - 1996-1999

20.73. PropertySet Pset_OvalDuctPort

20.73.1. Attribute and Relationship Definitions

Property Name	Definition	Property Type	Data or Rel. Type	Min.	Max.	Default
NominalWidth	Nominal width of oval duct measured along the X-Axis of the IfcLocalPlacement's direction vector.	IfcSimpleProperty	IfcLengthMeasure	see type	see type	0
NominalHeight	Nominal height of oval duct measured along the Y-Axis of the IfcLocalPlacement's direction vector.	IfcSimpleProperty	IfcLengthMeasure	see type	see type	0
ConnectionType	Enumeration that identifies the type of connection	IfcEnumeratedProperty	Pset_OvalDuctConnectionTypeEnum(BeadedSleeve, Drawband, OutsideSleeve, Flange, Crimp, Swedge, Other, NotKnown, Unset)			

20.74. PropertySet Pset_PackagedACUnit

20.74.1. PropertySet Semantic Definition

Definition from IAI: Equipment which utilizes an integral refrigeration cycle for cooling a fluid (typically air).

20.74.2. Attribute and Relationship Definitions

Property Name	Definition	Property Type	Data or Rel. Type	Min.	Max.	Default
CommonEquipmentProperties	Reference to the 'parent' SharedPropertySet (Pset_EquipmentCommon). Contains the shared values for this type -- of properties that are stored for all types of equipment.	IfcObjectReference	IfcGloballyUniqueId, Pset_EquipmentCommon	n/a	n/a	n/a
SensibleCoolingCapacity	Sensible cooling capacity of the PackagedACUnit per ARI Standards 210/240, 270, 275, 360, 340 and 365. (Data type = PowerMeasure)	IfcSimplePropertyWithUnit	IfcReal, PowerUnit	see type	see type	
LatentCoolingCapacity	Latent cooling capacity of the PackagedACUnit per ARI Standards 210/240, 270, 275, 360, 340 and 365. (Data type = PowerMeasure)	IfcSimplePropertyWithUnit	IfcReal, PowerUnit	see type	see type	0
CoolingEfficiency	Coeficient of Performance: Ratio of cooling energy output to energy input under full load operating conditions per ARI Standards 210/240, 270, 275, 360, 340 and 365. (Data type = PercentMeasure)	IfcSimplePropertyWithUnit	IfcReal, PercentMeasure	see type	see type	0
HeatingCapacity	Heating capacity of the	IfcSimplePropertyW	IfcReal, PowerUnit	see type	see type	0

Copyright © International Alliance for Interoperability - 1996-1999

	PackagedACUnit per ARI Standards 210/240, 270, 275, 360, 340 and 365 for heat pumps, AFUE for fuel burning and NEMA for electric heat. (Data type = PowerMeasure)	ithUnit				
HeatingEfficiency	Heating efficiency of the PackagedACUnit under full load heating conditions per ARI Standards 210/240, 270, 275, 360, 340 and 365 for heat pumps, AFUE for fuel burning and NEMA for electric heat. (Data type = PercentMeasure)	IfcSimplePropertyWithUnit	IfcReal, PercentMeasure	see type	see type	0
Compressors	Bag of references to IfcFlowEquipment objects of type Compressor that are used by the PackagedACUnit to perform work on the refrigerant.	IfcPropertyList	IfcObjectReference, IfcGloballyUniqueId, IfcFlowEquipment	n/a	n/a	n/a
CondenserFans	Bag of references to IfcFlowEquipment object of type Fan which defines properties of the condenser fan(s) used by the PackagedACUnit.	IfcPropertyList	IfcObjectReference, IfcGloballyUniqueId, IfcFlowEquipment	n/a	n/a	n/a
CondenserFlowrate	Flow rate of fluid through the condenser per manufacturer's listing (if available) (Data type = VolumetricFlowrateMeasure)	IfcSimplePropertyWithUnit	IfcReal, VolumetricFlowrateUnit	see type	see type	0
CondenserEntering Temperature	Temperature of fluid entering condenser per manufacturer's listing (if available)	IfcSimpleProperty	IfcThermodynamicTemperatureMeasure	see type	see type	0
CondenserLeaving Temperature	Termperature of fluid leaving condenser per manufacturer's listing (if available)	IfcSimpleProperty	IfcThermodynamicTemperatureMeasure	see type	see type	0
HeatingEnergySource	This enumeration identifies the primary energy source used for heating.	IfcEnumeratedProperty	Pset_EnergySourceEnum(Electricity, NaturalGas, Oil, LiquifiedPetroleumGas, Propane, Steam, Other, NotKnown, Unset)			
OutsideAirFlowrate	Flow rate of outside air entering the PackagedACUnit per the manufacturer's listing (if available) (Data type = VolumetricFlowrateMeasure)	IfcSimplePropertyWithUnit	IfcReal, VolumetricFlowrateUnit	see type	see type	0
SoundPowerLevel	Reference to a property set Pset_SoundPowerLevels which contains sound power level data	IfcObjectReference	IfcGloballyUniqueId, Pset_SoundPressureLevels	n/a	n/a	n/a

Copyright © International Alliance for Interoperability - 1996-1999

20.75. PropertySet Pset_PipeDesignCriteria

20.75.1. PropertySet Semantic Definition

Definition from IAI: This property set is used to define the general characteristics of the pipe design parameters. This property set is typically attached to an instance of an IfcSystem, however, it may also be attached to individual elements within a pipe distribution system where individual design parameters overrule those of the system. Related property sets include Pset_Fluid and Pset_Insulation.

20.75.2. Attribute and Relationship Definitions

Property Name	Definition	Property Type	Data or Rel. Type	Min.	Max.	Default
DesignName	A name for the design values	IfcSimpleProperty	IfcString	see type	see type	empty string
PipeSizingMethod	Enumeration that identifies the sizing method to be used if different from the system design criteria	IfcEnumeratedProperty	Pset_PipeSizingMethodEnum (MaximumVelocity, MaximumPressureDrop, Other, NotKnown, Unset)			
PressureClass	Nominal pressure rating of the piping system components (i.e., 125, 250, etc.) (Data type = PressureMeasure)	IfcSimplePropertyWithUnit	IfcReal, PressureUnit	see type	see type	0
MaximumVelocity	The maximum allowable fluid velocity (Data type = LinearVelocityMeasure)	IfcSimplePropertyWithUnit	IfcReal, LinearVelocityUnit	see type	see type	0
InsulationType	The insulation type to be used	IfcObjectReference	IfcGloballyUniqueId, Pset_Insulation	n/a	n/a	NIL

20.76. PropertySet Pset_PipeFitting

20.76.1. PropertySet Semantic Definition

Definition from IAI: This property set is used to define the characteristics of a pipe fitting. Related property sets include Pset_PipeDesignCriteria.

20.76.2. Attribute and Relationship Definitions

Property Name	Definition	Property Type	Data or Rel. Type	Min.	Max.	Default
FittingSubtype	This enumeration identifies the fitting subtype.	IfcEnumeratedProperty	Pset_PipeFittingSubtypeEnum(45DegreeElbow, 90DegreeElbow, Cap, Cock, Crossover, DoubleBranchElbow, Flange, Lateral, PipeJoint, Plug, Reducer, ReducingElbow, Sleeve, StreetElbow, Tee, Union, Other, NotKnown, Unset)			

Copyright © International Alliance for Interoperability - 1996-1999

20.77. PropertySet Pset_PipeSegment

20.77.1. PropertySet Semantic Definition

Definition from IAI: This property set is used to define the characteristics of a pipe segment. Related property sets include Pset_PipeDesignCriteria.

20.77.2. Attribute and Relationship Definitions

Property Name	Definition	Property Type	Data or Rel. Type	Min.	Max.	Default
FinishedLength	The finished length of the pipe segment	IfcSimpleProperty	IfcLengthMeasure	see type	see type	0

20.78. PropertySet Pset_PipeSystemDesignCriteria

20.78.1. PropertySet Semantic Definition

Definition from IAI: This property set is used to define the general characteristics of the duct system and is typically attached to an instance of an IfcSystem. Related property sets include Pset_Fluid and Pset_Insulation.

20.78.2. Attribute and Relationship Definitions

Property Name	Definition	Property Type	Data or Rel. Type	Min.	Max.	Default
PipeSystemType	Enumeration that identifies the type of system	IfcEnumeratedProperty	Pset_PipeSystemTypeEnum(DomesticHotWater, ChilledWater, CondenserWater, HeatingHotWater, Steam, Other, NotKnown, Unset)			
SystemDescription	System description	IfcSimpleProperty	IfcString	see type	see type	empty string
SystemLocation	Physical description of the part of the building the system serves	IfcSimpleProperty	IfcString	see type	see type	empty string
FluidSourcePressure	Pressure in main for domestic water, sprinklers, system pressure for hydronic systems, etc. (Data type = PressureMeasure)	IfcSimplePropertyWithUnit	IfcReal, PressureUnit	see type	see type	0
FluidLiftHeight	Lift that may be required on open systems with dense fluids. (Data type = PressureMeasure)	IfcSimplePropertyWithUnit	IfcReal, PressureUnit	see type	see type	0

20.79. PropertySet Pset_PlumbingFixtureCommon

20.79.1. Attribute and Relationship Definitions

Property Name	Definition	Property Type	Data or Rel. Type	Min.	Max.	Default

Copyright © International Alliance for Interoperability - 1996-1999

Description	Description of this fixture type. Note: name is included in the TypeDefinition.	IfcSimpleProperty	IfcString	see type	see type	empty string
AssetInformation	Reference to an OccurrencePropertySet (Pset_Asset) containing Information about this asset. This property set will be attached to the subject object - in the list of OccurrencePropertysets defined in the IfcObject supertype.	IfcObjectReference	IfcGloballyUniqueId, Pset_Asset	n/a	n/a	n/a
ManufactureInformation	Reference to property set Pset_ManufactureInformation, which defines information about the manufacture of this fixture.	IfcObjectReference	IfcGloballyUniqueId, IfcManufactureInformation	n/a	n/a	n/a
ElectricalCharacteristics	Reference to an OccurrencePropertySet (Pset_ElectricalCharacteristics) containing information about the electrical requirements for this fixture. This property set will be attached to the subject object - in the list of OccurrencePropertysets defined in the IfcObject supertype.	IfcObjectReference	IfcGloballyUniqueId, IfcElectricalCharacteristics	n/a	n/a	n/a
MaintenanceInformation	References to IfcMaintenanceRecord objects containing maintenance history	IfcPropertyList	IfcObjectReference, IfcGloballyUniqueId, IfcMaintenanceRecord	n/a	n/a	NIL
CleanWaterSystem	Boolean value to identify if this is a component in the clean water system (water supply). If the value is FALSE, then it is assumed to be a component in the waste water system.	IfcSimpleProperty	IfcBoolean	FALSE	TRUE	TRUE
FunctionalHeight	Height from floor to functional opening. Value of 0.0 means this property not set.	IfcSimpleProperty	IfcPositiveLengthMeasure	0	see type	0
MountingHeight	height at which the item gets connect to the wall. Value of 0.0 means this property not set.	IfcSimpleProperty	IfcPositiveLengthMeasure	0	see type	0
MountingType	Description of the method for mounting	IfcSimpleProperty	IfcString	n/a	n/a	empty string
WasteConnectPoint	Reference to the connection object relating this plumbing fixture to the waste connection	IfcPropertyList	IfcObjectReference, IfcGloballyUniqueId, IfcRelConnectsElements	n/a	n/a	NIL
HotWaterConnectPoint	Reference to the connection object relating this plumbing	IfcPropertyList	IfcObjectReference, IfcGloballyUniqueId,	n/a	n/a	NIL

Copyright © International Alliance for Interoperability - 1996-1999

	fixture to the hot water supply plumbing system.		IfcRelConnectsElements			
ColdWaterConnectPoint	Reference to the connection object relating this plumbing fixture to the cold water supply plumbing system	IfcPropertyList	IfcObjectReference, IfcGloballyUniqueId, IfcRelConnectsElements	n/a	n/a	NIL
ElectricalConnectPoint	Reference to the connection object relating this plumbing fixture to the electrical power system	IfcObjectReference	IfcGloballyUniqueId, IfcRelConnectsElements	n/a	n/a	NIL
ConstructionDetails	List of references to construction detail drawings	IfcPropertyList	IfcObjectReference, IfcDocumentReference	n/a	n/a	empty list
SpecificationSections	Reference to a section of the construction specification	IfcPropertyList	IfcObjectReference, IfcDocumentReference	n/a	n/a	NIL
OperationalSpace	Space around fixture required for proper use by occupants or as mandated by code requirements	IfcObjectReference	IfcGloballyUniqueId, IfcSpace	n/a	n/a	NIL
ManufacturerMaterial	Material selection from the manufacturer's material options for this fixture type	IfcSimpleProperty	IfcString	see type	see type	empty string
ManufacturerColor	Color selection from the manufacturer's color options for this fixture type	IfcSimpleProperty	IfcString	see type	see type	empty string
ManufacturerFinish	Finish selection from the manufacturer's finish options for this fixture type	IfcSimpleProperty	IfcString	see type	see type	empty string

20.80. PropertySet Pset_PowerOutlet

20.80.1. Attribute and Relationship Definitions

Property Name	Definition	Property Type	Data or Rel. Type	Min.	Max.	Default
CommonElectricalFixtureProperties	Reference to the SharedPropertySet (Pset_ElectricalFixtureCommon). Contains the shared values for this type -- of properties that are stored for all types of Electrical Fixtures.	IfcObjectReference	IfcGloballyUniqueId, Pset_ElectricalFixtureCommon	n/a	n/a	NIL

20.81. PropertySet Pset_Printer

20.81.1. Attribute and Relationship Definitions

Property Name	Definition	Property Type	Data or Rel. Type	Min.	Max.	Default
CommonElectricalAppliceProperties	Reference to the 'parent' SharedPropertySet (Pset_ElectricalApplianceCommon). Contains the shared values for this type -- properties that are stored for	IfcObjectReference	IfcGloballyUniqueId, Pset_ElectricalApplianceCommon	n/a	n/a	n/a

Copyright © International Alliance for Interoperability - 1996-1999

	all types of ElectricalAppliances.					

20.82. PropertySet Pset_Pump

20.82.1. PropertySet Semantic Definition

Definition from IAI: Equipment which imparts mechanical work on a liquid.

20.82.2. Attribute and Relationship Definitions

Property Name	Definition	Property Type	Data or Rel. Type	Min.	Max.	Default
CommonEquipment Properties	Reference to the 'parent' SharedPropertySet (Pset_EquipmentCommon). Contains the shared values for this type -- of properties that are stored for all types of equipment.	IfcObjectReference	IfcGloballyUniqueId, Pset_EquipmentCommon	n/a	n/a	n/a
PumpType	This enumeration identifies the types of centrifugal pumps typically used in building services	IfcEnumeratedProperty	Pset_PumpTypeEnum(Circulator, EndSuction, SplitCase, VerticalInline, VerticalTurbine, Other, NotKnown, Unset)			
FluidMover	Reference to the Pset_FluidMover property set which contains fluid flow characteristics for the pump	IfcObjectReference	IfcGloballyUniqueId, Pset_FluidMover	n/a	n/a	n/a
WorkingPressure	Nominal working pressure (Data type = PressureMeasure)	IfcSimplePropertyWithUnit	IfcReal, PressureUnit	see type	see type	0
NetPositiveSuction Head	Minimum liquid pressure at pump inlet to prevent cavitation (Data type = PressureMeasure)	IfcSimplePropertyWithUnit	IfcReal, PressureUnit	see type	see type	0
FluidTemperature	Nominal termperature of pumped liquid	IfcSimpleProperty	IfcThermodynamicTemperatureMeasure	see type	see type	0
ImpellerSize	Dimension of pump impeller	IfcSimpleProperty	IfcLengthMeasure	see type	see type	0
ImpellerSealMaterial	Reference to the material used for the impeller shaft seals	IfcObjectReference	IfcMaterial	n/a	n/a	n/a
PumpBaseType	This enumeration identifies the types of bases used for centrifugal pumps.	IfcEnumeratedProperty	Pset_PumpBaseTypeEnum(Frame, Base, Inline, Other, NotKnown, Unset)			
MotorDriveType	This enumeration identifies the type of connection between the motor shaft and the pump impeller.	IfcEnumeratedProperty	Pset_MotorDriveTypeEnum(DirectDrive, BeltDrive, Coupling, Other, NotKnown, Unset)			
Motor	Reference to an IfcEquipment object of type Motor which cointains information about the Pump Motor.	IfcObjectReference	IfcGloballyUniqueId, IfcFlowEquipment	n/a	n/a	n/a

Copyright © International Alliance for Interoperability - 1996-1999

20.83. PropertySet Pset_RadiantHeater

20.83.1. Attribute and Relationship Definitions

Property Name	Definition	Property Type	Data or Rel. Type	Min.	Max.	Default
CommonElectricalFixtureProperties	Reference to the SharedPropertySet (Pset_ElectricalFixtureCommon). Contains the shared values for this type -- of properties that are stored for all types of Electrical Fixtures.	IfcObjectReference	IfcGloballyUniqueId, Pset_ElectricalFixtureCommon	n/a	n/a	NIL

20.84. PropertySet Pset_RectangularDuctPort

20.84.1. Attribute and Relationship Definitions

Property Name	Definition	Property Type	Data or Rel. Type	Min.	Max.	Default
NominalWidth	Nominal width of rectangular duct measured along the X-Axis of the IfcLocalPlacement's direction vector.	IfcSimpleProperty	IfcLengthMeasure	see type	see type	0
NominalHeight	Nominal height of rectangular duct measured along the Y-Axis of the IfcLocalPlacement's direction vector.	IfcSimpleProperty	IfcLengthMeasure	see type	see type	0
ConnectionType	Enumeration that identifies the type of connection	IfcEnumeratedProperty	Pset_RectangularDuctConnectionTypeEnum(DriveSlip, S-Slip, Flange, SlipOn, StandingSeam, Angle, Other, NotKnown, Unset)			

20.85. PropertySet Pset_RoofDrain

20.85.1. Attribute and Relationship Definitions

Property Name	Definition	Property Type	Data or Rel. Type	Min.	Max.	Default
ManufactureInformation	reference to Manufacturer information	IfcObjectReference	IfcGloballyUniqueId, IfcManufactureInformation	n/a	n/a	NIL
TributaryAreaDrained	Area that is allocated to this drain if it is a primary drain. Value of 0.00 means this value has not been set or it is a secondary drain.	IfcSimpleProperty	IfcAreaMeasure	0	see type	0
FlowRating	Actual flow capacity for the drain. Value of 0.00 means this value has not been set. (Data type = VolumetricFlowrateMeasure)	IfcSimplePropertyWithUnit	IfcReal, VolumetricFlowrateUnit	0	see type	0

Copyright © International Alliance for Interoperability - 1996-1999

ConstructionDetail	References to construction detail drawings	IfcPropertyList	IfcObjectReference, IfcDocumentReference	n/a	n/a	NIL
SpecifcationSection	References to specification sections	IfcPropertyList	IfcObjectReference, IfcDocumentReference	n/a	n/a	NIL

20.86. PropertySet Pset_RoundDuctPort

20.86.1. Attribute and Relationship Definitions

Property Name	Definition	Property Type	Data or Rel. Type	Min.	Max.	Default
NominalDiameter	Nominal diameter of round duct measured along the X-Axis of the IfcLocalPlacement's direction vector.	IfcSimpleProperty	IfcLengthMeasure	see type	see type	0
ConnectionType	Enumeration that identifies the type of connection	IfcEnumeratedProperty	Pset_RoundDuctConnectionTypeEnum(BeadedSleeve, Drawband, OutsideSleeve, Flange, Crimp, Swedge, Other, NotKnown, Unset)			

20.87. PropertySet Pset_RoundPipePort

20.87.1. Attribute and Relationship Definitions

Property Name	Definition	Property Type	Data or Rel. Type	Min.	Max.	Default
NominalDiameter	Nominal diameter of round pipe measured along the X-Axis of the IfcLocalPlacement's direction vector.	IfcSimpleProperty	IfcLengthMeasure	see type	see type	0
ConnectionType	Enumeration that identifies the type of connection	IfcEnumeratedProperty	Pset_RoundPipeConnectionTypeEnum(Flange, Screw, Weld, BellAndSpigot, Thread, Other, NotKnown, Unset)			

20.88. PropertySet Pset_Scupper

20.88.1. Attribute and Relationship Definitions

Property Name	Definition	Property Type	Data or Rel. Type	Min.	Max.	Default
ManufactureInformation	reference to Manufacturer information	IfcObjectReference	IfcGloballyUniqueId, IfcManufactureInformation	n/a	n/a	NIL
ConstructionDetail	References to construction detail drawings	IfcPropertyList	IfcObjectReference, IfcDocumentReference	n/a	n/a	NIL
SpecifcationSection	References to specification sections	IfcPropertyList	IfcObjectReference, IfcDocumentReference	n/a	n/a	NIL

Copyright © International Alliance for Interoperability - 1996-1999

20.89. PropertySet Pset_Shower

20.89.1. Attribute and Relationship Definitions

Property Name	Definition	Property Type	Data or Rel. Type	Min.	Max.	Default
CommonPlumbingFixtureProperties	Reference to the SharedPropertySet (Pset_PlumbingFixtureCommon). Contains the shared values for this type -- of properties that are stored for all types of Plumbing Fixtures.	IfcObjectReference	IfcGloballyUniqueId, Pset_PlumbingFixtureCommon	n/a	n/a	NIL

20.90. PropertySet Pset_Sink

20.90.1. Attribute and Relationship Definitions

Property Name	Definition	Property Type	Data or Rel. Type	Min.	Max.	Default
CommonPlumbingFixtureProperties	Reference to the SharedPropertySet (Pset_PlumbingFixtureCommon). Contains the shared values for this type -- of properties that are stored for all types of Plumbing Fixtures.	IfcObjectReference	IfcGloballyUniqueId, Pset_PlumbingFixtureCommon	n/a	n/a	NIL

20.91. PropertySet Pset_SiteWeatherData

20.91.1. PropertySet Semantic Definition

Definition from IAI: Provides access to weather data appropriate to the site and is used for calculating thermal loads.

20.91.2. Attribute and Relationship Definitions

Property Name	Definition	Property Type	Data or Rel. Type	Min.	Max.	Default
Description	The site weather data station description or reference to the data source from which weather data was obtained for use in calculations.	IfcSimpleProperty	IfcString	see type	see type	empty string
Date	The date for which the weather data was gathered.	IfcObjectReference	IfcCalendarDate	see type	see type	NULL

20.92. PropertySet Pset_SoundPressureLevels

20.92.1. Attribute and Relationship Definitions

Property Name	Definition	Property Type	Data or Rel. Type	Min.	Max.	Default

Copyright © International Alliance for Interoperability - 1996-1999

63Herz	Sound Pressure Level measured in decibels at a reference pressure of 20 microPascals for the octave band frequency centered around 63 Hertz (Data type = PressureMeasure)	IfcSimplePropertyWithUnit	IfcReal, PressureUnit	see type	see type	0
125Herz	Sound Pressure Level measured in decibels at a reference pressure of 20 microPascals for the octave band frequency centered around 125 Hertz (Data type = PressureMeasure)	IfcSimplePropertyWithUnit	IfcReal, PressureUnit	see type	see type	0
250Herz	Sound Pressure Level measured in decibels at a reference pressure of 20 microPascals for the octave band frequency centered around 250 Hertz (Data type = PressureMeasure)	IfcSimplePropertyWithUnit	IfcReal, PressureUnit	see type	see type	0
500Herz	Sound Pressure Level measured in decibels at a reference pressure of 20 microPascals for the octave band frequency centered around 500 Hertz (Data type = PressureMeasure)	IfcSimplePropertyWithUnit	IfcReal, PressureUnit	see type	see type	0
1000Herz	Sound Pressure Level measured in decibels at a reference pressure of 20 microPascals for the octave band frequency centered around 1000 Hertz (Data type = PressureMeasure)	IfcSimplePropertyWithUnit	IfcReal, PressureUnit	see type	see type	0
2000Herz	Sound Pressure Level measured in decibels at a reference pressure of 20 microPascals for the octave band frequency centered around 2000 Hertz (Data type = PressureMeasure)	IfcSimplePropertyWithUnit	IfcReal, PressureUnit	see type	see type	0
4000Herz	Sound Pressure Level measured in decibels at a reference pressure of 20 microPascals for the octave band frequency centered around 4000 Hertz (Data type = PressureMeasure)	IfcSimplePropertyWithUnit	IfcReal, PressureUnit	see type	see type	0
8000Herz	Sound Pressure Level measured in decibels at a reference pressure of 20 microPascals for the octave band frequency centered around 8000 Hertz (Data type = PressureMeasure)	IfcSimplePropertyWithUnit	IfcReal, PressureUnit	see type	see type	0

Copyright © International Alliance for Interoperability - 1996-1999

20.93. PropertySet Pset_SpaceElementInformation

20.93.1. PropertySet Semantic Definition

Definition from IAI: Space or zone thermal properties and desgn constraints.

20.93.2. Attribute and Relationship Definitions

Property Name	Definition	Property Type	Data or Rel. Type	Min.	Max.	Default
CoolingDesignAirflow	The air flowrate required during the peak cooling conditions (Data type = VolumetricFlowrateMeasure)	IfcSimplePropertyWithUnit	IfcReal, VolumetricFlowrateUnit	see type	see type	0
HeatingDesignAirflow	The air flowrate required during the peak heating conditions, but could also be determined by minimum ventilation requirement or minimum air change requirements. (Data type = VolumetricFlowrateMeasure)	IfcSimplePropertyWithUnit	IfcReal, VolumetricFlowrateUnit	see type	see type	0
TotalSensibleHeatGain	The total sensible heat or energy gained by the space during the peak cooling conditions (Data type = PowerMeasure)	IfcSimplePropertyWithUnit	IfcReal, PowerUnit	see type	see type	0
TotalHeatGain	The total amount of heat or energy gained by the space at the time of the space's peak cooling conditions (Data type = PowerMeasure)	IfcSimplePropertyWithUnit	IfcReal, PowerUnit	see type	see type	0
TotalHeatLoss	The total amount of heat or energy lost by the space at the time of the space's peak heating conditions (Data type = PowerMeasure)	IfcSimplePropertyWithUnit	IfcReal, PowerUnit	see type	see type	0
HeatingDryBulb	Inside dry bulb temperature for heating design	IfcSimpleProperty	IfcThermodynamicTemperatureMeasure	see type	see type	0
HeatingRelativeHumidity	Inside relative humidity for heating design (Data type = PercentMeasure)	IfcSimplePropertyWithUnit	IfcReal, PercentMeasure	see type	see type	0
CoolingDryBulb	Inside dry bulb temperature for cooling design	IfcSimpleProperty	IfcThermodynamicTemperatureMeasure	see type	see type	0
CoolingRelativeHumidity	Inside relative humidity for cooling design (Data type = PercentMeasure)	IfcSimplePropertyWithUnit	IfcReal, PercentMeasure	see type	see type	0
VentilationAirFlowrate	Ventilation outside air requirement (Data type =	IfcSimplePropertyWithUnit	IfcReal, VolumetricFlowrateUnit	see type	see type	0

Copyright © International Alliance for Interoperability - 1996-1999

	VolumetricFlowrateMeasure)					
ExhaustAirFlowrate	Exhaust air flow rate for the space (Data type = VolumetricFlowrateMeasure)	IfcSimplePropertyWithUnit	IfcReal, VolumetricFlowrateUnit	see type	see type	0
CeilingRAPlenum	Ceiling plenum used for return air or not. TRUE = Yes, FALSE = No.	IfcSimpleProperty	IfcBoolean	FALSE	TRUE	FALSE
BoundaryAreaHeatLoss	Heat loss per unit area for the boundary object. This is a design input value for use in the absence of calculated load data (Data type = HeatfluxDensityMeasure)	IfcSimplePropertyWithUnit	IfcReal, HeatFluxDensityUnit	see type	see type	0

20.94. PropertySet Pset_Telephone

20.94.1. Attribute and Relationship Definitions

Property Name	Definition	Property Type	Data or Rel. Type	Min.	Max.	Default
CommonElectricalAppliancePropertiesReference to the 'parent' SharedPropertySet (Pset_ElectricalApplianceCommon). Contains the shared values for this type -- properties that are stored for all types of ElectricalAppliances.		IfcObjectReference	IfcGloballyUniqueId, Pset_ElectricalApplianceCommon	n/a	n/a	n/a

20.95. PropertySet Pset_Toilet

20.95.1. Attribute and Relationship Definitions

Property Name	Definition	Property Type	Data or Rel. Type	Min.	Max.	Default
CommonPlumbingFixtureProperties	Reference to the SharedPropertySet (Pset_PlumbingFixtureCommon). Contains the shared values for this type -- of properties that are stored for all types of Plumbing Fixtures.	IfcObjectReference	IfcGloballyUniqueId, Pset_PlumbingFixtureCommon	n/a	n/a	NIL

20.96. PropertySet Pset_TubeBundle

20.96.1. PropertySet Semantic Definition

Definition from IAI: Tube and bundles of tubes properties used within equipment.

Copyright © International Alliance for Interoperability - 1996-1999

20.96.2. Attribute and Relationship Definitions

Property Name	Definition	Property Type	Data or Rel. Type	Min.	Max.	Default
CommonEquipmentProperties	Reference to the 'parent' SharedPropertySet (Pset_EquipmentCommon). Contains the shared values for this type -- of properties that are stored for all types of equipment.	IfcObjectReference	IfcGloballyUniqueId, Pset_EquipmentCommon	n/a	n/a	n/a
Fluid	Reference to the Pset_Fluid property set for information about the properties of the fluid used in the TubeBundle	IfcObjectReference	IfcGloballyUniqueId, Pset_Fluid	n/a	n/a	n/a
TubeSize	Nominal diameter of tubes in the bundle	IfcSimpleProperty	IfcLengthMeasure	see type	see type	0
TubeMaterial	Reference to the material used for construction of the tubes	IfcObjectReference	IfcMaterial	n/a	n/a	n/a
Length	Nominal length of tubes	IfcSimpleProperty	IfcLengthMeasure	see type	see type	0
Spacing	Spacing between tubes	IfcSimpleProperty	IfcLengthMeasure	see type	see type	0
FluidFlowrate	Design fluid flow rate through the tube bundle (Data type = VolumetricFlowrateMeasure)	IfcSimplePropertyWithUnit	IfcReal, VolumetricFlowrateMeasure	see type	see type	0
FluidVelocity	Design Velocity of the fluid through an individual tube (Data type = LinearVelocityMeasure)	IfcSimplePropertyWithUnit	IfcReal, LinearVelocityMeasure	see type	see type	0
FluidEnteringTemperature	List of design temperatures of entering conditions; for air the list consists of dry bulb followed by wet bulb	IfcPropertyList	IfcSimpleProperty, IfcThermodynamicTemperatureMeasure	see type	see type	0
FluidLeavingTermperature	List of design temperatures of leaving conditions; for air the list consists of dry bulb followed by wet bulb	IfcPropertyList	IfcSimpleProperty, IfcThermodynamicTemperatureMeasure	see type	see type	0
FluidPressureDrop	Pressure drop of the fluid through the TubeBundle at the design fluid flow rate (Data type = PressureMeasure)	IfcSimplePropertyWithUnit	IfcReal, PressureUnit	see type	see type	0
FluidEnteringPressure	Design pressure of the fluid entering the tube bundle (Data type = PressureMeasure)	IfcSimplePropertyWithUnit	IfcReal, PressureUnit	see type	see type	0
FluidLeavingPressure	Design pressure of the fluid leaving the tube bundle (Data type = PressureMeasure)	IfcSimplePropertyWithUnit	IfcReal, PressureUnit	see type	see type	0
FoulingFactor	Fouling factor of the tubes	IfcSimpleProperty	IfcReal	see type	see type	0

Copyright © International Alliance for Interoperability - 1996-1999

20.97. PropertySet Pset_UnitHeater

20.97.1. PropertySet Semantic Definition

Definition from IAI: Equipment which adds heat to a space.

20.97.2. Attribute and Relationship Definitions

Property Name	Definition	Property Type	Data or Rel. Type	Min.	Max.	Default
CommonEquipmentProperties	Reference to the 'parent' SharedPropertySet (Pset_EquipmentCommon). Contains the shared values for this type -- of properties that are stored for all types of equipment.	IfcObjectReference	IfcGloballyUniqueId, Pset_EquipmentCommon	n/a	n/a	n/a
HeatCapacity	Nominal heat transfer capacity of the unit heater (Data type = PowerMeasure)	IfcSimplePropertyWithUnit	IfcReal, PowerUnit	see type	see type	0
Coil	Bag of one or more references to an IfcFlowEquipment object of type Coil that defines the coil(s) that are used by the UnitHeater	IfcPropertyList	IfcObjectReference, IfcGloballyUniqueId, IfcFlowEquipment	n/a	n/a	n/a

20.98. PropertySet Pset_Urinal

20.98.1. Attribute and Relationship Definitions

Property Name	Definition	Property Type	Data or Rel. Type	Min.	Max.	Default
CommonPlumbingFixtureProperties	Reference to the SharedPropertySet (Pset_PlumbingFixtureCommon). Contains the shared values for this type -- of properties that are stored for all types of Plumbing Fixtures.	IfcObjectReference	IfcGloballyUniqueId, Pset_PlumbingFixtureCommon	n/a	n/a	NIL

20.99. PropertySet Pset_WindowCleaning

20.99.1. Attribute and Relationship Definitions

Property Name	Definition	Property Type	Data or Rel. Type	Min.	Max.	Default
CommonEquipmentProperties	Reference to a SharedPropertySet (Pset_EquipmentCommon) which defines properties that are stored for all types of equipment.	IfcObjectReference	IfcGloballyUniqueId, Pset_EquipmentCommon	n/a	n/a	NIL
WindowCleaningEl	Enumeration of the various	IfcEnumeratedProp	Pset_WindowCleaningEleme			

Copyright © International Alliance for Interoperability - 1996-1999

ementType		erty	ntTypeEnum(Apparatus, Carriage, Rails, Rigging, Tracks, Other, NotKnown, Unset)			

21. IfcSharedSpatialElements

The Schema IfcSharedSpatialElements is defined at the Interoperability Layer and covers the definition of spatial elements that are shared among several IFC domain or application type models. It enhances the definition of space as specified at the IfcProductExtension schema.

21.1. Type IfcLossOrGainEnum

21.1.1. Type Semantic Definition

Definition from IAI: This enumeration defines the thermal use cases as either being a loss or a gain to the space.

History

New Enumeration in IFC Release 2.0

21.1.2. Enumeration

Loss
Gain
NotDefined

21.2. Type IfcOccupantTypeEnum

21.2.1. Type Semantic Definition

Definition from IAI: This enumeration defines the available Generic Types for IfcOccupant.

History

New Enumeration in IFC Release 2.0

21.2.2. PreDefined Type

This enumeration defines the available PreDefined Types for IfcOccupant

21.2.3. Enumeration

Owner
Lessee
Tenant
Assignee
UserDefined
NotDefined

Copyright © International Alliance for Interoperability - 1996-1999

21.3. Type IfcRequirementOrCriteriaEnum

21.3.1. Type Semantic Definition

Definition from IAI: This enumeration defines whether the thermal use case is a requirement for a particular thermal space quality or a criteria.

History

New Enumeration in IFC Release 2.0

21.3.2. Enumeration

Requirement
Criteria
NotDefined

21.4. Type IfcResidentEnum

21.4.1. Type Semantic Definition

Definition from IAI: This enumeration defines the different categories under which residents of a space or building can be classified.

History

New Enumeration in IFC Release 2.0

21.4.2. Enumeration

Intermittent
Regular
Permanent
NotDefined

21.5. Type IfcUseCaseSourceEnum

21.5.1. Type Semantic Definition

Definition from IFC: This enumeration defines the various sources of thermal loads or gains for spaces, derived from various use cases.

History

New Enumeration in IFC Release 2.0

21.5.2. Enumeration

Person
Lighting
Machine

Copyright © International Alliance for Interoperability - 1996-1999

VentilationInnerAir
VentilationOuterAir
ExhaustAir
AirExchangeRate
DryBulbTemperature
RelativeHumidity

21.6. Type IfcVisitorEnum

21.6.1. Type Semantic Definition

Definition from IAI: This enumeration defines the different categories under which visitors of a space or building can be classified.

History

New Enumeration in IFC Release 2.0

21.6.2. Enumeration

Intermittent
Regular
NotDefined

21.7. Class IfcFireCompartment

21.7.1. Class Semantic Definition

Definition from IAI: The Fire Compartment class (IfcFireCompartment) is considered as a specialization of Space (IfcSpace) for fire compartmentation purposes. It is an aggregate of spaces under this view, using the IfcRelAssemblesSpaces objectified relationship. It defines the geometric information about the fire compartment, the fire use classification, fire risk factors and information, whether this compartment is ventilated or sprinkler protected.

History

New Entity in IFC Release 2.0

21.7.2. Attribute and Relationship Definitions

Superclasses and Subclasses

IfcRoot
  IfcObject
    IfcProduct
      IfcSpatialElement
        IfcSpace
          IfcFireCompartment

Attributes and Relationships

	Attribute / Relation	Definition	Data or Rel. Type	Min.	Max.	Default
OPT	calcHeightAboveGrade	Height of floor of top storey of Fire	IfcLengthMeasure	see type	see type	1

Copyright © International Alliance for Interoperability - 1996-1999

		Compartment above accessible horizontal surface external to the Fire Compartment.				
OPT	MainFireUse	Main fire use for the space which is assigned from the Fire Use Classification.	IfcClassification	see type	see type	see type
OPT	AncillaryFireUse	Ancillary fire use for the space which is assigned from the Fire Use Classification.	IfcClassification	see type	see type	see type
OPT	FireRiskFactor	Fire Risk factor assigned to the space	INTEGER	see type	see type	see type
	HasNaturalVentilation	Indication whether the space is ventilated natural (true) or mechanical (false).	LOGICAL	FALSE	TRUE	TRUE
	HasSprinklerProtection	Indication whether the space is sprinkler protected (true) or not (false).	LOGICAL	FALSE	TRUE	FALSE

Formal Propositions

WR61	The fire compartment class can only exists as an assembly of spaces
WR62	The fire compartment shall not assemble other fire compartments

21.7.3. Interface Definitions

- I_FireCompartment

21.7.4. Geometry Use Definitions

The geometric use cases for IfcFireCompartment are defined at its supertype IfcSpace.

21.8. Class IfcOccupancyNumber

21.8.1. Class Semantic Definition

Definition from IAI: The Occupancy Number Class (IfcOccupancyNumber) contains all information about the actual and planned, internal and cumulative occupancy numbers and occupancy rate. In addition more detailed information about the physical ability, the type of occupiers (residents or visitors), and the type of occupancy (intermittent, regular, permanent) are captured.

History

New Entity in IFC Release 2.0

21.8.2. Attribute and Relationship Definitions

Superclasses and Subclasses

IfcRoot
  IfcPropertyDefinition
    IfcOccupancyNumber

Attributes and Relationships

	Attribute / Relation	Definition	Data or Rel. Type	Min.	Max.	Default
OPT	ActualOccupancyNumb	The actual number of persons housed in	INTEGER	0	see type	1

Copyright © International Alliance for Interoperability - 1996-1999

	er	a space, zone or building at a given time, usually in an existing accommodation.				
OPT	DesignIntentOccupancyNumber	The number of persons housed in a space, zone or building as specified in the Design Brief.	INTEGER	0	see type	1
OPT	ActualCumulativeOccupancyNumber	The actual number of occupants in a space, zone, or building, plus that arriving from adjacent evacuated spaces.	INTEGER	0	see type	1
OPT	DesignIntentCumulativeOccupancyNumber	The design intent number of occupants in a space, zone, or building, plus that arriving from adjacent evacuated spaces.	INTEGER	0	see type	1
OPT	OccupancyRate	Occupancy per Area Measure as specified for a specific function of the space, usually given by a recognized standard. The usually used unit is Person/m².	IfcMeasureWithUnit	0	see type	1
OPT	ActualNumberOfResidents	The actual number of residents housed in a space.	INTEGER	0	see type	1
OPT	DesignIntentNumberOfResidents	The number of residents housed in a space as specified in the Design Brief.	INTEGER	0	see type	1
OPT	ResidentsOccupancyType	Resident, those who either live or work in the space under consideration, occupy the space.	IfcResidentEnum	Intermittent	Undefined	Intermittent
OPT	ActualNumberOfVisitors	The actual number of visitors occupying a space in a given time.	INTEGER	0	see type	0
OPT	DesignIntentNumberOfVisitors	The number of visitors occupying a space in a given time as specified in the Design Brief.	INTEGER	0	see type	0
OPT	VisitorsOccupancyType	Visitors - coming into the space for the purpose of visiting, viewing; but do not come to carryout any duties, normally performed, within the space by the residents; or for the residents.	IfcVisitorEnum	Intermittent	Undefined	Intermittent
OPT	ActualPercentageRequiringAssistance	Actual percentage of all occupance, that require assistence in case of fire escaping, e.g. disabled people or youngsters.	IfcPositiveRatioMeasure	0	see type	0
OPT	DesignIntentPercentageRequiringAssistance	Design intent percentage of all occupance, that require assistence in case of fire escaping, e.g. disabled people or youngsters.	IfcPositiveRatioMeasure	0	see type	0

21.8.3. Interface Definitions

- I_OccupancyNumber

21.8.4. Geometry Use Definitions

Instances of this class have no physical presence and therefore no geometric representation.

Copyright © International Alliance for Interoperability - 1996-1999

21.9. Class IfcOccupant

21.9.1. Class Semantic Definition

Definition from IAI: The Occupant Class (IfcOccupant) contains all information about the occupancy owner, tenant, or lessee for the referenced space, zone, or building. An occupant is an actor within the project, characterized by its ownership relation to spaces.

The sum of all IfcOccupant instances assigned to a space, zone or building, combines all information about the occupancy aspect for spaces, zones, or buildings. In particular:

- *ownership*, who owns the space, zone, building, land?
- *rental*, who rents (tenant) the space, zone, building from whom (landlord)
- *leasing*, who leases (lessee) the space, zone, building, land from whom (lessor)
- *rental details*: duration of tenancy, rent frequency period
- *leasing details*: lease period, lease dates
- *assignee*: to whom is the space assigned?

History

New Entity in IFC Release 2.0

21.9.2. Attribute and Relationship Definitions

Superclasses and Subclasses

IfcRoot
  IfcObject
    IfcActor
      IfcOccupant

Attributes and Relationships

	Attribute / Relation	Definition	Data or Rel. Type	Min.	Max.	Default
	PredefinedType	Predefined types are specified in an enumeration. A Property Type Definition is available for each predefined type .	IfcOccupantTypeEnum	Owner	NotDefined	Owner

Formal Propositions

WR41	The user defined type has only to be given, if the value of the predefined type is UserDefined
WR42	The occupant shall play an occupancy role as expressed by the IfcRelOccupiesSpaces relationship.

21.9.3. Interface Definitions

- I_Occupant

21.9.4. Type Definitions

Type driven PropertySets

PreDefined Type	Associated PropertySet
Owner	Pset_OccupantOwner
Lessee	Pset_OccupantLeesee
Tenant	Pset_OccupantTenant
Assignee	Pset_OccupantAssignee
NotDefined	

Copyright © International Alliance for Interoperability - 1996-1999

UserDefined	

21.9.5. Geometry Use Definitions

Instances of this class have no physical presence and therefore no geometric representation.

21.10. Class IfcRelOccupiesSpaces

21.10.1. Class Semantic Definition

Definition from IAI: The relationship object IfcRelOccupiesSpaces further constrains the parent relationship IfcRelActsUpon to a relationship between occupants (IfcOccupant) and either a space (IfcSpace), a collection of spaces (IfcZone), a building story (IfcBuildingStorey), or a building (IfcBuilding).

History

New Entity in IFC Release 2.0

21.10.2. Attribute and Relationship Definitions

Superclasses and Subclasses

IfcRoot
  IfcRelationship
    IfcRelActsUpon
      IfcRelOccupiesSpaces

Attributes and Relationships

No attributes defined at this level.

Formal Propositions

WR41	The actor in the occupancy relationship shall by of type IfcOccupant
WR42	The objects in the occupancy relationship shall be of type IfcSpace

21.10.3. Interface Definitions

- I_SpaceOccupancy

21.11. Class IfcSpaceUseCase

21.11.1. Class Semantic Definition

Definition from IFC: The space use case defines all thermal losses and gains occurring within a space or zone. Those losses or gains can either be requirements (desired values) or criteria (actual values). The source attribute defines the source of loss or gain, and the maximum value and applicable value ratio are interpreted according to the source (see definition of IfcUseCaseSourceEnum).

History

New Entity in IFC Release 2.0

Copyright © International Alliance for Interoperability - 1996-1999

21.11.2. Attribute and Relationship Definitions

Superclasses and Subclasses

IfcRoot
IfcPropertyDefinition
IfcSpaceUseCase

Attributes and Relationships

	Attribute / Relation	Definition	Data or Rel. Type	Min.	Max.	Default
	LossOrGain	Indicated whether the source causes a loss (TRUE) or gain (FALSE) for the space.	IfcLossOrGainEnum	FALSE	TRUE	TRUE
	RequirementOrCriteria	Indicated whether the source values describe a desired value as requirement (TRUE) or an actual value as criteria (FALSE) for the space.	IfcRequirementOrCriteriaEnum	FALSE	TRUE	TRUE
	Source	Source of the use or load characteristic, depending on the source, the maximum value has to be interpreted	IfcUseCaseSourceEnum			
OPT	SourceDescription	Further specification for the source, which might be specific for a region or project. E.g. whether the heat gain from Person is caused by specific activities.	STRING	see type	see type	see type
	MaximumValue	Maximum value of the Gain or Loss for the use requirement or criteria, interpretation and unit depends on the source type	IfcMeasureWithUnit	see type	see type	see type
OPT	ApplicableValueRatio	Percentage of use requirement or criteria applicable to the space, interpretation depends on the source type	IfcPositiveRatioMeasure	see type	see type	see type
	ConstantLoad	Indication, whether the use requirement or load is constant during the hours of a day (TRUE) or not (FALSE). If not, a Pset_H24Schedule has to be referenced by ExtendedProperties	BOOLEAN	FALSE	TRUE	TRUE

21.11.3. Interface Definitions

- I_SpaceUseCase

21.11.4. Geometry Use Definitions

Instances of this class have no physical presence and therefore no geometric representation.

21.12. PropertySet Pset_OccupantAssignee

21.12.1. PropertySet Semantic Definition

Definition from IAI: Properties common to the definition of all IfcOccupant with the generic type 'Assignee'.

Copyright © International Alliance for Interoperability - 1996-1999

21.12.2. Attribute and Relationship Definitions

No attributes defined for this Property Set

21.13. PropertySet Pset_OccupantLeesee

21.13.1. PropertySet Semantic Definition

Definition from IAI: Properties common to the definition of all IfcOccupant with the generic type 'Leesee'.

21.13.2. Attribute and Relationship Definitions

Property Name	Definition	Property Type	Data or Rel. Type	Min.	Max.	Default
LeaseDate	Date when of the leasing contract starts	IfcObjectReference	IfcCalendarDate	see type	see type	see type
LeasePeriod	Period for leasing the property	IfcSimpleProperty	IfcTimeMeasure	see type	see type	see type
UnlimitedPeriod	Indication whether the lease contract is unlimited (true) or time limited (false). In the latter case, the LeasePeriod attribute specifies the duration of the contract.	IfcSimpleProperty	IfcBoolean	FALSE	TRUE	FALSE

21.14. PropertySet Pset_OccupantOwner

21.14.1. PropertySet Semantic Definition

Definition from IAI: Properties common to the definition of all IfcOccupant with the generic type 'Owner'.

21.14.2. Attribute and Relationship Definitions

Property Name	Definition	Property Type	Data or Rel. Type	Min.	Max.	Default
FreeholdLandOwner	Is owner the land owner?	IfcSimpleProperty	IfcBoolean	FALSE	TRUE	FALSE
FreeholdBuildingOwner	Is owner the building owner?	IfcSimpleProperty	IfcBoolean	FALSE	TRUE	TRUE

21.15. PropertySet Pset_OccupantTenant

21.15.1. PropertySet Semantic Definition

Definition from IAI: Properties common to the definition of all IfcOccupant with the generic type 'Tenant'.

21.15.2. Attribute and Relationship Definitions

Property Name	Definition	Property Type	Data or Rel. Type	Min.	Max.	Default
TenancyDate	Date when of the tenancy contract starts	IfcObjectReference	IfcCalendarDate	see type	see type	see type
TenancyPeriod	Period for renting the property	IfcSimpleProperty	IfcTimeMeasure	see type	see type	see type
UnlimitedPeriod	Indication whether the tenancy contract is unlimited	IfcSimpleProperty	IfcBoolean	FALSE	TRUE	FALSE

Copyright © International Alliance for Interoperability - 1996-1999

	(true) or time limited (false). In the latter case, the TenancyPeriod attribute specifies the duration of the contract.					

Copyright © International Alliance for Interoperability - 1996-1999