Core Model Layer

13. IfcKernel

The schema IfcKernel defines the most abstract part within the IFC architecture. It captures general constructs, that are basically founded by their different semantic meaning in common understanding of an object model, like object, property and relationship. Those are then specialized into non-AEC/FM specific constructs, like product, process, control and resource, which form the main entry points for the next level, the Core Extension layer.

The IfcKernel utilizes the translation of the IFC Meta model into IFC object model specification. It handles the basic functionality, such as relative location of products in space, sequence of processes in time, or general purpose grouping and nesting mechanism. It also lays the foundation of extensibility of IFC model by providing type driven property definition and property definition extension.

The specification of IfcKernel is not intended for independent implementation, however, all shared and domain models at lower levels within the IFC architecture are required to use the kernel definitions to root their definitions.

13.1. Select IfcObjectWithPlacementSelect

13.1.1. Select Semantic Definition

Definition from IAI: The IfcObjectWithPlacementSelect defines the three high level classes in IFC, that define their own placement. These objects can therefore provide the local (or in case of IfcProject -- global) coordinate system to which other object coordinate systems can refer.

ISSUE See issues I-212 and I-312 for changes made in IFC Release 1.5.

13.1.2. Select

IfcProduct
IfcModelingAid
IfcProject

13.2. Type IfcContainedOrReferencedEnum

13.2.1. Type Semantic Definition

Definition from IAI: This enumeration defines the whether the containment type is “Contained” or “Referenced”. Contained means a hierarchical relationship between the contained item and the container, where any item can only be contained once. Referenced means a non-hierarchical relationship between the referenced item and the referencing container, where any item can be referenced by one or many referencing containers.

The term “container” is used for any item in a logical structuring systems, to which an object is assigned to (either “Contained” or “Referenced”). A structuring system can be the project structure of site → building → building story → space, where each individual site, building, building story, or space object can act as an “container” for objects.

Copyright © International Alliance for Interoperability - 1996-1999

EXAMPLE A multi-story space is contained (i.e. in hierarchic relationship) to the building story, on which its ground level is. The same multi-story space is referenced by any building story, through which it spans.

ISSUE See Issues I-114 and I-116 for changes made in IFC Release 1.5.

History

New Enumeration in IFC Release 2.0

13.2.2. Enumeration

Contained
Referenced

13.3. Type IfcContainmentEnum

13.3.1. Type Semantic Definition

Definition from IAI: This enumeration defines the different containment types, that further refine the containment relationship.

ISSUE See Issues I-114 and I-116 for changes made in IFC Release 1.5.

13.3.2. Enumeration

ProjectContainer
SiteContainer
BuildingContainer
BuildingStoreyContainer
SpaceContainer
ZoneContainer
NotDefined

13.4. Type IfcProxyEnum

13.4.1. Type Semantic Definition

Definition from IAI: This enumeration defines the high level categorization of an IfcProxy. It indicates to which subtype of IfcObject the Proxy would otherwise comply.

ISSUE See issue I-184 for changes made in IFC Release 1.5.

13.4.2. Enumeration

Product
Process
Control
Document
Resource
NotDefined

Copyright © International Alliance for Interoperability - 1996-1999

13.5. Type IfcResourceConsumptionEnum

13.5.1. Type Semantic Definition

Definition from IAI: This enumeration indicates how the resource is consumed during the use.

ISSUE See issue I-487 for changes made in IFC Release 2.0.

History

New Enumeration in IFC Release 2.0

13.5.2. Enumeration

Consumed
PartiallyConsumed
Occupied
PartiallyOccupied
NotOccupied
UserDefined
NotDefined

13.6. Type IfcSequenceEnum

13.6.1. Type Semantic Definition

Definition from IAI: : This enumeration defines the different ways, in which a time lag is applied to a sequence between two processes.

ISSUE See issue I-200 for changes made in IFC Release 1.5.

13.6.2. Enumeration

Start_Start
Start_Finish
Finish_Start
Finish_Finish
NotDefined

13.7. Class IfcActor

13.7.1. Class Semantic Definition

Definition from IAI: The IfcActor defines all actors or human agents involved in a project during its full life cycle. It facilitates the use of person and organization definitions in the resource part of the IFC object model.

ISSUE See issues I-478, I-516 for changes made in IFC Release 2.0.

History

New Entity in IFC Release 2.0

Copyright © International Alliance for Interoperability - 1996-1999

13.7.2. Attribute and Relationship Definitions

Superclasses and Subclasses

IfcRoot
IfcObject
IfcActor
IfcOccupant

Attributes and Relationships

	Attribute / Relation	Definition	Data or Rel. Type	Min.	Max.	Default
	TheActor	Information about the actor	IfcActorSelect	n/a	n/a	n/a
INV	IsActingUpon	Reference to the relationship that associates the actor to an object.	SET [0:?] OF IfcRelActsUpon	0	N	1

13.7.3. Interface Definitions

- I_Actor

13.8. Class IfcControl

13.8.1. Class Semantic Definition

Definition from IAI: The IfcControl is the abstract generalization of all concepts that control or constrain Products or Processes in general. It can be seen as a specification, regulation, constraint or other requirement applied to a product or process whose requirements and provisions must be fulfilled.

Examples for Controls are space program, construction guides, etc. It is defined in the Kernel but will be reused and specialized in other schemas.

ISSUE See issue I-094 for changes made in IFC Release 1.5.

History

This Entity has changed after IFC Release 1.5.1, please see the Migration Guide for details

13.8.2. Attribute and Relationship Definitions

Superclasses and Subclasses

IfcRoot
IfcObject
IfcControl
IfcConnectionGeometry
IfcSpaceProgram
IfcFurnitureModel
IfcOccupancySchedule
IfcScheduleTimeControl
IfcWorkPlan
IfcProjectOrder
IfcDistributionPortGeometry
IfcConstraint
IfcCMDocPackage
IfcOccupancyScheduleElement

Copyright © International Alliance for Interoperability - 1996-1999

IfcWorkScheduleElement
IfcWorkSchedule
IfcCostElement
IfcCostSchedule
IfcApproval
IfcMaintenanceRecord
IfcMaintenanceType

Attributes and Relationships

	Attribute / Relation	Definition	Data or Rel. Type	Min.	Max.	Default
OPT	Classification	Reference to the access information for classified information. NOTE: not the classified information is referenced, only the unambiguous access to it.	IfcClassificationList	n/a	n/a	n/a
INV	Controls	Reference to the relationship that associates the control to the object(s) being controled.	SET [0:?] OF IfcRelControls	0	N	1

13.8.3. Interface Definitions

- I_Control

13.9. Class IfcExtensionPropertySet

13.9.1. Class Semantic Definition

Definition from IAI: Defines those dynamically extendable properties that are defined as extensions to the IFC Object model (see semantic definition of IfcObject). Extension property sets can form part of a regional flavor of IFC or can be project specific extensions to the actual content of an IFC release. The definition source (the body that defined the extension) has to be given.

History

New Entity in IFC Release 2.0

13.9.2. Attribute and Relationship Definitions

Superclasses and Subclasses

IfcRoot
  IfcPropertyDefinition
    IfcPropertySet
      IfcExtensionPropertySet

Attributes and Relationships

	Attribute / Relation	Definition	Data or Rel. Type	Min.	Max.	Default
	DefinitionSource	The Source attribute specifies the source of the external definition. It can be either the name of a recognised country or region, which defines a national flavour of IFC, or the name of a project consortium, or the name of a group of implementers.	STRING	see type	see type	n/a

Copyright © International Alliance for Interoperability - 1996-1999

13.9.3. Interface Definitions

- I_ExternalPropertySet

13.10. Class IfcGroup

13.10.1. Class Semantic Definition

Definition from IAI: The generalization of any arbitrary group. A group is an aggregation of objects, which do not have any particular positioning relationship. Therefore a group is an aggregation under some non-geometrical/topological grouping aspects. An example for a group is the system, since it groups elements under the aspect of their role, regardless of their position in a building. A group can hold an aggregation of products, processes or other groups. Groups can therefore be nested.

The GroupPurpose attribute may assign a descriptor, that defines the purpose of the group. As an example, a complex of buildings will be generated by assigning the individual buildings through the IfcRelGroups relationship to an IfcGroup, which is further specified by the GroupPurpose descriptor “BuildingComplex”. Similarly the site complex is handled by an IfcGroup with the GroupPurpose descriptor “SiteComplex”.

ISSUE See issues I-088 and I-213 for changes made in IFC Release 1.5.

History

This Entity has changed after IFC Release 1.5.1, please see the Migration Guide for details

13.10.2. Attribute and Relationship Definitions

Superclasses and Subclasses

IfcRoot
  IfcObject
    IfcGroup
      IfcSystem
      IfcZone
      IfcSpaceProgramGroup
      IfcInventory

Attributes and Relationships

	Attribute / Relation	Definition	Data or Rel. Type	Min.	Max.	Default
OPT	GroupPurpose	Description of the Purpose behind grouping.	STRING	n/a	n/a	NIL
INV	IsGroupedBy	Contains the relationship that assigns the group members to the group object.	IfcRelGroups	n/a	n/a	n/a

13.10.3. Interface Definitions

- I_Group

Copyright © International Alliance for Interoperability - 1996-1999

13.11. Class IfcLocalPlacement

13.11.1. Class Semantic Definition

Definition from IAI: The relative placement between two products. It defines that the related object is placed within the local coordinate system of the relating object. Rules to prevent cyclic relative placements have to be introduced on the application level.

The following conventions shall apply, if relative placement is used:

- IfcSite shall be placed relative to IfcProject (i.e. WCS)
- IfcBuilding shall be placed relative to IfcSite
- IfcBuildingStorey shall be placed relative to IfcBuilding
- IfcElement shall be placed relative:
- to its container (IfcSite, IfcBuilding, IfcBuildingStorey), or
- to the IfcElement to which it is tied by an element relationship (IfcRelVoidsElement, IfcRelFillsElement, IfcRelCoversBldgElements, IfcRelAssemblesElements), or
- to the modeling aid (Grid)

If the PlacementRelTo Relationship is not given, then it defaults to an absolute placement within the WCS, i.e. relative to the IfcProject.

ISSUE See issues I-212, I-255, I-260 and I-270 for changes made in IFC Release 1.5.

13.11.2. Attribute and Relationship Definitions

Superclasses and Subclasses

IfcRoot
IfcModelingAid
IfcLocalPlacement
IfcConstrainedPlacement

Attributes and Relationships

	Attribute / Relation	Definition	Data or Rel. Type	Min.	Max.	Default
OPT	PlacementRelTo	Reference to Object that provides the relative placement by its local coordinate system, if it is omitted, then the Local Placement is given to the WCS, established by the IfcProject.	IfcObjectWithPlacementSelect	n/a	n/a	not optional
	RelativePlacement	Geometric placement that defines the transformation from the related coordinate system into the relating. The placement can be either 2D or 3D, depending on the dimension count of the coordinate system.	IfcAxis2Placement	n/a	n/a	n/a

Formal Propositions

WR31	Either PlacementRelTo is not given, or it shall not refer to an IfcLocalPlacement directly.

13.11.3. Interface Definitions

- I_LocalPlacement

Copyright © International Alliance for Interoperability - 1996-1999

13.12. Class IfcModelingAid

13.12.1. Class Semantic Definition

Definition from IAI: An IfcModelingAid provides the general concept for constructs that support the creation of design artifact, in particular its geometric form. They are part of the project information set, but not part of the artifact itself. Most common example of a modeling aid are the local placement and the design grid. Both provide aid to place Products into the design space. The grid supports in addition the definition of elements' constraint location and sometimes form, but the grid is not part of the constructed building.

ISSUE See issues I-254 and I-255 for changes made in IFC Release 1.5.

13.12.2. Attribute and Relationship Definitions

Superclasses and Subclasses

IfcRoot
IfcModelingAid
IfcLocalPlacement
IfcDesignGrid
IfcGridAxis
IfcGridIntersection
IfcGridLevel
IfcPlacementConstraint
IfcReferenceGeometryAid
IfcLightSource
IfcPhotometricOutputSpace

Attributes and Relationships

No attributes defined at this level.

13.12.3. Interface Definitions

- I_ModelingAid

13.13. Class IfcObject

13.13.1. Class Semantic Definition

Definition from IAI: The generalization of any semantically treated things and processes within IFC. Examples of IfcObject include physically tangible items, such as wall, beam or covering, physically existing items, such as spaces, or conceptual items, such as grids or virtual boundaries. It also stands for processes, such as work tasks, as well as for controls, etc.

Objects are independent pieces of information that might contain or reference other pieces of information, most notably properties. Properties of objects can be of either of the following types:

- **Type driven properties**
  These define all properties that are associated to a single or multiple instance(s) of "object" class by virtue of a "type". The "type" denotes a special classification of an "object" class, not expressed by creating a subtype, but by attaching a particular set of properties. This is realized by the IfcRelAssignsTypedProperties class.
- **Non type driven properties**
  These define all properties that are associated to a single or multiple instance(s) of "object" class,

Copyright © International Alliance for Interoperability - 1996-1999

independently of its "type". Therefore (generally) no restriction is made to which particular "object" class, a non type driven property can be attached. This is realized by the IfcRelAssignsProperties class.

- **Occurrence properties**
  These define all properties that are associated to a single instance of "object" class only within a populated IFC Object model. This is realized by the IsShared attribute at IfcRelAssignsProperties.
- **Shared properties**
  These define all properties that are associated to two or more instances of "object" class within a populated IFC Object model. This is realized by the IsShared attribute at IfcRelAssignsProperties.
- **Dynamically extendable properties**
  These define properties for which the IFC Object model only provides a kind of "meta-model", to be further declared at runtime. This means no class definition of the properties exists within the IFC Object model. The declaration is done by assigning a significant string value to the "Name" attribute of the class as defined in the IFC Object model. This is realized by the IfcPropertySet and its subtype.
- **Statically defined properties**
  These define properties for which a class definition exist within the IFC Object model. The semantic meaning of each statically defined property is declared on compile time. This is realized by the subtypes of IfcPropertyDefinition, exept IfcPropertySet and its subtype.
- **Properties defined as part of the IFC Object model**
  These define properties that are specified as part of the IFC Object model specification, as issued by the International Alliance for Interoperability. The specification can be done either within the static part, i.e. the EXPRESS schema definition, or within the Property definition part, identifying the recognizable string values for the "Name" attribute. This is realized by any subtype of IfcPropertyDefinition except IfcExternalPropertySet.
- **Properties defined as extension to the IFC object model**
  These define properties that are agreed upon within a regional, national, or project-based context, using the capability of the IFC Object model to assign string values for the "Name" attribute, that are not recognizable by the specifications, as issued by the International Alliance for Interoperability. This is realized by IfcExternalPropertySet.

All of the concepts about object properties are incorporated into the IFC object model and allow for a clear distinction between an object definition and the associated property definitions.

ISSUE See issues I-079, I-085 for changes made in IFC Release 1.5.
See issue I-361 for changes made in IFC Release 1.5.1.

History

This Entity has changed after IFC Release 1.5.1, please see the Migration Guide for details

13.13.2. Attribute and Relationship Definitions

Superclasses and Subclasses

IfcRoot
IfcObject
IfcControl
IfcGroup
IfcProcess
IfcProduct
IfcProject
IfcProxy
IfcResource
IfcActor

Attributes and Relationships

	Attribute / Relation	Definition	Data or Rel. Type	Min.	Max.	Default
OPT	UserDefinedType	User defined type, given for the	STRING	see type	see type	NIL

Copyright © International Alliance for Interoperability - 1996-1999

		instantiable subtypes of IfcObject. If for a given subtype, a predefined type exists (an attribute PredefinedType with the data type Enumaration, then the value for user defined is only valid, if the predefined value is set to UserDefined. Allows for the addition of regional extensions of IFC.				
	DocumentReferences	Reference to a document reference that holds the access information to an externally provided document.	SET [0:?] OF IfcDocumentReference	0	N	0
INV	PartOfGroups	References to the grouping relationships, which allows the object to be part of many groups	SET [0:?] OF IfcRelGroups	0	N	0
INV	Nests	Reference to the nesting relationship, that allows this object to be the nest of other nested objects	SET [0:1] OF IfcRelNests	0	1	0
INV	IsNestedBy	References to the nesting relationship, that allows this object to be nested within other objects	SET [0:?] OF IfcRelNests	0	N	0
INV	Contains	Set of Relationships to other Objects that are contained by this object.	SET [0:2] OF IfcRelContains	0	2	0
INV	IsContainedBy	Set of Relationships to other Objects in which this object is contained.	SET [0:?] OF IfcRelContains	0	N	0
INV	OperatedInProcesses	Set of Relationships to processes which operated on the object.	SET [0:?] OF IfcRelProcessOperatesOn	0	N	0
INV	IsDefinedBy	Set of Relationships to properties (statically or dynamically defined) that further define the object..	SET [0:?] OF IfcRelAssignsProperties	0	N	0
INV	IsActedUpon	Set of Relationships to actors which acts upon the object.	SET [0:?] OF IfcRelActsUpon	0	N	0
INV	IsControlledBy	Set of Relationships to controls which apply a control to the object.	SET [0:?] OF IfcRelControls	0	N	0

13.13.3. Interface Definitions

- I_Object

13.14. Class IfcProcess

13.14.1. Class Semantic Definition

Definition from IAI: An action taking place in building construction with the intent of acquiring or constructing products. Processes are placed in sequence (including overlapping for parallel tasks) in time.

ISSUE See issues I-200, I-201 for changes made in IFC Release 1.5.

History

This Entity has changed after IFC Release 1.5.1, please see the Migration Guide for details

Copyright © International Alliance for Interoperability - 1996-1999

13.14.2. Attribute and Relationship Definitions

Superclasses and Subclasses

IfcRoot
IfcObject
IfcProcess
IfcWorkTask
IfcOccupancyTask

Attributes and Relationships

	Attribute / Relation	Definition	Data or Rel. Type	Min.	Max.	Default
OPT	Productivity	Productivity of the process (such as m^3 per hour)	IfcMeasureWithUnit	n/a	n/a	NIL
OPT	Classification	Reference to the access information for classified information. NOTE: not the classified information is referenced, only the unambiguous access to it.	IfcClassificationList	n/a	n/a	NIL
INV	IsSuccessorFrom	Relative placement in time, refers to the previous processes for which this process is successor.	SET [0:?] OF IfcRelSequence	0	N	0
INV	IsPredecessorTo	Relative placement in time, refers to the previous processes for which this process is predecessor.	SET [0:?] OF IfcRelSequence	0	N	0
INV	OperatesOn	Set of Relationships to objects that are operated on by the process	SET [0:?] OF IfcRelProcessOperatesOn	0	2	0

13.14.3. Interface Definitions

- I_Process

13.15. Class IfcProduct

13.15.1. Class Semantic Definition

Definition from IAI: Any object, manufactured, supplied or created for incorporation into an AEC/FM project. This also includes objects that are created indirectly by other products, as spaces are defined by bounding elements. Products can be designated for permanent use or temporary use, an example for the latter is formwork.

Products are defined by their properties and representations. Products occur at a specific location in space. They can be placed relatively to other products, but ultimately relative to the world coordinate system defined for this project.

History

This Entity has changed after IFC Release 1.5.1, please see the Migration Guide for details

13.15.2. Attribute and Relationship Definitions

Superclasses and Subclasses

IfcRoot
IfcObject

Copyright © International Alliance for Interoperability - 1996-1999

IfcProduct
- IfcBuilding
- IfcBuildingStorey
- IfcElement
- IfcSite
- IfcSpatialElement
- IfcConstructionZoneAggregationProduct

Attributes and Relationships

	Attribute / Relation	Definition	Data or Rel. Type	Min.	Max.	Default
	LocalPlacement	Contained relative placement in space, refers to the product that provides the local coordinate system for the Relative Placement and includes the transformation for the object coordinate system.	IfcLocalPlacement	0	2	1
	Representations	Reference to the representations of the product, being either geometric shape representations or topological representations, or both. The product definition shape provides for multiple representations of the shape property of the object. The product definition topology provides for basic topology and connectivity information.	SET [0:2] OF IfcProductRepresentation	n/a	n/a	NIL
OPT	Classification	Reference to the access information for classified information. NOTE: not the classified information is referenced, only the unambiguous access to it.	IfcClassificationList	n/a	n/a	NIL

13.15.3. Interface Definitions

- I_Product

13.16. Class IfcProject

13.16.1. Class Semantic Definition

Definition from IAI: The undertaking of some engineering activities leading towards a product. It acts as the top container for all objects defining a project. The Project also holds the units used for certain measures throughout the project and the central registry, currently only for team members, applications and materials. The IfcProject establishes the World Coordinate System, WCS.

ISSUE See issues I-084, I-001, I-003 for changes made in IFC Release 1.5.
See issues I-298, I-328 for changes made in IFC Release 1.5.1.

History

This Entity has changed after IFC Release 1.5.1, please see the Migration Guide for details

13.16.2. Attribute and Relationship Definitions

Superclasses and Subclasses

IfcRoot

Copyright © International Alliance for Interoperability - 1996-1999

IfcObject
IfcProject

Attributes and Relationships

	Attribute / Relation	Definition	Data or Rel. Type	Min.	Max.	Default
OPT	ReferenceName	Short name for the project as used for reference purposes.	STRING	n/a	n/a	empty string
OPT	Name	Long name for the project.	STRING	n/a	n/a	empty string
OPT	Phase	Current project phase, open to interpretation for all project partner, therefore given as IfcString.	STRING	n/a	n/a	empty string
	UnitsInContext	Defines the units of measure that will be referred by defined data types in the attribute values of all attributes and properties of objects and relationships, defined in the context of this project.	IfcUnitAssignment	n/a	n/a	n/a
OPT	Classification	Reference to the access information for classified information. NOTE: not the classified information is referenced, only the unambiguous access to it.	IfcClassificationList	n/a	n/a	NIL
	AbsolutePlacement	Establishment of the World Coordinate System for the Project	IfcAxis2Placement	n/a	n/a	0,0,0 and P1 1,0,0 P2 0,1,0 P3 0,0,1

13.16.3. Interface Definitions

- I_Project

13.17. Class IfcPropertyDefinition

13.17.1. Class Semantic Definition

Definition from IAI: Defines the generalization of all properties (dynamically defined and statically defined). It cannot be instantiated as it is an ABSTRACT class.

History

New Entity in IFC Release 2.0

13.17.2. Attribute and Relationship Definitions

Superclasses and Subclasses

IfcRoot
IfcPropertyDefinition
IfcOccupancyNumber
IfcSpaceUseCase
IfcManufactureInformation
IfcPropertySet
IfcMetricValue
IfcElectricalCharacteristics

Copyright © International Alliance for Interoperability - 1996-1999

Attributes and Relationships

	Attribute / Relation	Definition	Data or Rel. Type	Min.	Max.	Default
INV	DefinitionOf	Reference to the relation to one or many objects that are characterized by the property definition.	IfcRelAssignsProperties	n/a	n/a	n/a

13.17.3. Interface Definitions

- I_PropertyDefinition

13.18. Class IfcPropertySet

13.18.1. Class Semantic Definition

Definition from IAI: Defines all dynamically extendable properties (see semantic definition of IfcObject). The IfcPropertySet is a container class that allows the definition of collections of IfcProperty, and the nesting of other IfcPropertySet.

ISSUES: See issues I-078, I-080, I-187, GI-003 for changes made in IFC Release 1.5.

History

New Entity in IFC Release 2.0

13.18.2. Attribute and Relationship Definitions

Superclasses and Subclasses

IfcRoot
  IfcPropertyDefinition
    IfcPropertySet
      IfcExtensionPropertySet

Attributes and Relationships

	Attribute / Relation	Definition	Data or Rel. Type	Min.	Max.	Default
	Name	Name of the property set as used within the project. The attribute is used to dynamically specify the type of the property definition. Directly instantiated at IfcPropertySet it provides for the properties defined as part of the IFC Object model (see semantic definition at IfcObject). The property set structure for that IfcPropertySet is given within the property set definition part of the IFC specification.	STRING	see type	see type	n/a
	HasProperties	Contained list of properties. For property sets defined as part of the IFC Object model, the property objects within a property set are defined as part of the standard. If a property is not contained within the list of predefined properties, ist value has not been set at this time.	LIST [1:?] OF IfcProperty	1	N	1

Copyright © International Alliance for Interoperability - 1996-1999

13.18.3. Interface Definitions

- I_PropertySet

13.19. Class IfcProxy

13.19.1. Class Semantic Definition

Definition from IAI: The IfcProxy is intended to be a kind of a container for wrapping up non-IFC objects for use within the persistent store. Given that we have only a limited number of constructs formally defined within IFC (and will never be able to define them all), we must provide a mechanism for capturing constructs (primarily geometric) that are not defined by IFC. These constructs may or may not have semantic meaning, depending on whether any representations or extended property sets are attached to the IfcProxy. Either way, a receiving system only has to ensure that they are maintained as part of the project model. Such a mechanism allows to exchange data that is part of the project but not necessarily part of the IFC model.

ISSUE See issue I-184 for changes made in IFC Release 1.5.

History

This Entity has changed after IFC Release 1.5.1, please see the Migration Guide for details

13.19.2. Attribute and Relationship Definitions

Superclasses and Subclasses

IfcRoot
  IfcObject
    IfcProxy

Attributes and Relationships

	Attribute / Relation	Definition	Data or Rel. Type	Min.	Max.	Default
	ProxyType	High level (and only) semantic meaning attached to the IfcProxy, defining the basic construct type behind the Proxy, e.g. Product or Process.	IfcProxyEnum	Product	Resource	Product
OPT	LocalPlacement	In case of a Product Proxy, the placement within the space of the Project is given.	IfcLocalPlacement	n/a	n/a	NIL
	Representations	In case of a Product Proxy, reference to the representations of the product, being either geometric shape representations or topological representations, or both. The product definition shape provides for multiple representations of the shape property of the object. The product definition topology provides for basic topology and connectivity information.	SET [0:2] OF IfcProductRepresentation	n/a	n/a	NIL

Formal Propositions

WR2	Either the proxy is a product, or it should not have geometric or topologic representations.
WR33	If the IfcProxy is a Product, then a local placement shall be given, otherwise no local placement shall be given.

Copyright © International Alliance for Interoperability - 1996-1999

13.19.3. Interface Definitions

- I_Proxy

13.20. Class IfcRelActsUpon

13.20.1. Class Semantic Definition

Definition from IAI: The IfcRelActsUpon objectified relationship defines a relationship between an actor and one or many objects. An particular role of the actor played in that relationship can be associated.

History

New Entity in IFC Release 2.0

13.20.2. Attribute and Relationship Definitions

Superclasses and Subclasses

IfcRoot
  IfcRelationship
    IfcRelActsUpon
      IfcRelOccupiesSpaces

Attributes and Relationships

	Attribute / Relation	Definition	Data or Rel. Type	Min.	Max.	Default
	RelatingActor	Reference to the actor.	IfcActor	n/a	n/a	n/a
	RelatedObjects	Reference to the objects (or single object) on which the actor acts upon in a certain role (if given)	LIST [1:?] OF IfcObject	1	N	1
OPT	ActingRole	Role of the actor played within the assignment to the object(s).	IfcActorRole	n/a	n/a	NIL

Formal Propositions

WR32	The relationship shall not define an actor to actor relationship.

Informal Propositions

IP31	The relationship shall be defined acyclic.

13.20.3. Interface Definitions

- I_RelActsUpon

13.21. Class IfcRelAssignsProperties

13.21.1. Class Semantic Definition

Definition from IAI: The IfcRelAssignsProperties class defines the light-weight relationships between properties and objects. Directly instantiated it provides for non-type driven property assignments (see semantic definition of IfcObject).

Copyright © International Alliance for Interoperability - 1996-1999

The IfcRelAssignsProperties is a N:M relationship, as it allows for the assignment of one to many (related) properties to a single or many objects.

History

New Entity in IFC Release 2.0

13.21.2. Attribute and Relationship Definitions

Superclasses and Subclasses

IfcRoot
IfcRelationship
IfcRelAssignsProperties
IfcRelAssignsTypedProperties

Attributes and Relationships

	Attribute / Relation	Definition	Data or Rel. Type	Min.	Max.	Default
	RelatingPropertyDefinition	Reference to the property definition for that object or list of objects.	IfcPropertyDefinition	n/a	n/a	n/a
	RelatedObjects	Reference to the objects (or single object) to which the property definition applies.	LIST [1:?] OF IfcObject	1	N	1
OPT	DomainView	The attribute DomainView optionally defines the domain, to which the assigned IfcPropertyDefinition relates. If not present, the IfcPropertyDefinition is applicable to all domain views. The DomainView is given as STRING type to allow an easy upgrade for new releases and for assigning arbitrary domain view names for externally defined property sets.	STRING	see type	see type	NIL
	IsShared	The attribute IsShared reflects whether the property is assigned to a single object instance (FALSE = occurrence property,) or assigned to multiple object instances (TRUE = shared property, see semantic definition at IfcObject).	LOGICAL	FALSE	TRUE	n/a

13.21.3. Interface Definitions

- I_RelAssignsProperties

13.22. Class IfcRelAssignsTypedProperties

13.22.1. Class Semantic Definition

Definition from IAI: The IfcRelAssignsTypedProperties class defines the light-weight relationships between properties and objects for type-driven property assignments (see semantic definition of IfcObject). It is provided as specialization of IfcRelAssignsProperties.

Copyright © International Alliance for Interoperability - 1996-1999

History

New Entity in IFC Release 2.0

13.22.2. Attribute and Relationship Definitions

Superclasses and Subclasses

IfcRoot
IfcRelationship
IfcRelAssignsProperties
IfcRelAssignsTypedProperties

Attributes and Relationships

	Attribute / Relation	Definition	Data or Rel. Type	Min.	Max.	Default
	Name	The attributes Name defines the Name of the 'type' being defined, as given by the IFC specification. A 'type' is used to establish a standard of object property definitions, that may be used many times in a project. A given 'type' drives the assignment of one IfcPropertyDefinition instance (which might include other IfcPropertyDefinitions in case of nested property sets) to an IfcObject instance (occurrence type) or to many IfcObject instances (shared type).	STRING	see type	see type	NIL
OPT	TypedClass	The attribute TypedClass optionally defines the IfcObject, to which the assigned IfcPropertyDefinition relates. If not present, no instruction is given to which IfcObject the IfcPropertyDefinition is applicable.	STRING	see type	see type	n/a

13.22.3. Interface Definitions

- I_RelAssignsTypedProperties

13.23. Class IfcRelContains

13.23.1. Class Semantic Definition

Definition from IAI: This objectified relationship handles the general concept of containment, that can be either realized by reference or by value. Currently the concept of containment is used for buildings as a special kind of AEC/FM products.

A distinctions is made between the containment and the reference of Elements. A containment relationship shall lead to a hierarchical relationship, i.e. each element can only be contained by one instance of a element container (i.e. site, building, building storey, zone or space). It might however be referenced by many element containers. A multi-storey space is contained (or belongs to) the building storey at which its ground level is, but it is referenced by all the other building storeys, in which it spans. A lift shaft might be contained by the basement, but referenced by all storeys, through which it spans.

A reference relationship provides for non-hierarchical relationships.

Copyright © International Alliance for Interoperability - 1996-1999

ISSUE See issues GI-008, I-116 for changes made in IFC Release 1.5.
See issue I-310 for changes made in IFC Release 1.5.1.

History

This Entity has changed after IFC Release 1.5.1, please see the Migration Guide for details

13.23.2. Attribute and Relationship Definitions

Superclasses and Subclasses

IfcRoot
IfcRelationship
IfcRelContains

Attributes and Relationships

	Attribute / Relation	Definition	Data or Rel. Type	Min.	Max.	Default
	RelatingObject	Reference to the container object	IfcObject	n/a	n/a	n/a
	RelatedObjects	Reference to the contained objects	LIST [1:?] OF IfcObject	1	N	1
	RelationshipType	Defines the type of relationship from the relating side, i.e. following the container object, in which the other objects are contained.	IfcContainmentEnum	ProjectContainer	SpaceContainer	ProjectContainer
	ContainedOrReferenced	Defines whether the relationship is a hierarchical containment relationship (Contained) or a reference relationship (Referenced)	IfcContainedOrReferencedEnum	Contained	Referenced	Contained

Formal Propositions

WR31	The instance to which the RelatingObject relation points (container) shall not be contained in the List of RelatedObjects.

Informal Propositions

IP31	The IfcRelContains relationship shall be defined acyclic.

13.23.3. Interface Definitions

- I_RelContains

13.24. Class IfcRelControls

13.24.1. Class Semantic Definition

Definition from IAI: This objectified relationship handles the assignment of controls (subtypes of IfcControl) to other objects (subtypes of IfcObject, with the exception of controls).

History

New Entity in IFC Release 2.0

Copyright © International Alliance for Interoperability - 1996-1999

13.24.2. Attribute and Relationship Definitions

Superclasses and Subclasses

IfcRoot
IfcRelationship
IfcRelControls
IfcRelRelatesConstraints
IfcRelCostsObjects
IfcRelAssignsApprovals
IfcRelControlsMaintenance

Attributes and Relationships

	Attribute / Relation	Definition	Data or Rel. Type	Min.	Max.	Default
	RelatingControl	Reference to the control that applies an control about objects.	IfcControl	n/a	n/a	n/a
	RelatedObjects	Reference to the objects being controled.	LIST [1:?] OF IfcObject	1	N	1

Formal Propositions

WR31	Control shall not be applied to control objects.

Informal Propositions

IP31	The IfcRelControls relationship shall be defined acyclic.

13.24.3. Interface Definitions

- I_RelContains

13.25. Class IfcRelGroups

13.25.1. Class Semantic Definition

Definition from IAI: This objectified relationship handles the assignment of group members to group objects. It allows for grouping arbitrary objects within a group, including other groups. The grouping relationship can be applied in a recursive manner. The resulting group is of type IfcGroup.

ISSUE See issue I-310 for changes made in IFC Release 1.5.1.

13.25.2. Attribute and Relationship Definitions

Superclasses and Subclasses

IfcRoot
IfcRelationship
IfcRelGroups

Attributes and Relationships

	Attribute / Relation	Definition	Data or Rel. Type	Min.	Max.	Default
	RelatingGroup	Reference to group that finally contains all assigned group members.	IfcGroup	n/a	n/a	n/a
	RelatedObjects	References to Objects that will be	LIST [1:?] OF IfcObject	1	n/a	1

Copyright © International Alliance for Interoperability - 1996-1999

		contained in the group.				

Formal Propositions

WR31	The instance to with the relation points shall not be contained in the List of RelatedObjects.
WR32	The dependency flags shall be set so that the RelatedObjects always depend on the RelatingObject (the group)

Informal Propositions

IP31	The IfcRelGroups relationship shall be defined acyclic.

13.25.3. Interface Definitions

- I_RelGroups

13.26. Class IfcRelNests

13.26.1. Class Semantic Definition

Definition from IAI: The nesting relationship defines the general concept of elements being nested, so that the nest is of the same type (or supertype) as the nested elements. An example is, that a cost element is a nest of other cost elements. The nesting relationship can be applied in a recursive manner.

ISSUE See issue I-310 for changes made in IFC Release 1.5.1.

History

This Entity has changed after IFC Release 1.5.1, please see the Migration Guide for details

13.26.2. Attribute and Relationship Definitions

Superclasses and Subclasses

IfcRoot
IfcRelationship
IfcRelNests
IfcRelNestsProcesses
IfcRelNestsOccupancyScheduleElements
IfcRelNestsOccupancySchedules
IfcRelNestsWorkScheduleElements
IfcRelNestsWorkSchedules
IfcRelNestsCostElements
IfcRelNestsCostSchedules

Attributes and Relationships

	Attribute / Relation	Definition	Data or Rel. Type	Min.	Max.	Default
	RelatingObject	The object that represents the nest.	IfcObject	n/a	n/a	n/a
	RelatedObjects	The objects being nested.	LIST [1:?] OF IfcObject	1	N	1
OPT	NestingPurpose	Any description to explain the criteria about nesting those objects	STRING			

Formal Propositions

WR31	The instance to which the relation RelatingObject points shall not be contained in the List of RelatedObjects.

Copyright © International Alliance for Interoperability - 1996-1999

WR32	The type of the RelatingObject shall always be included in the type of each RelatedObject, i.e. the RelatingObject is of the same type of a common supertype
WR33	The dependency flags shall be set so that the RelatedObjects always depends on the RelatingObject (the nest)
WR34	Products shall not be nested (use aggregation relationships).

Informal Propositions

IP31	The IfcRelNests relationship shall be defined acyclic.

13.26.3. Interface Definitions

- I_RelNests

13.27. Class IfcRelProcessOperatesOn

13.27.1. Class Semantic Definition

Definition from IAI: This objectified relationship handles the assignment of an object as an item the process operates on. Process are related to the products that they operate on (input or output) through this relationship. Processes can operate on things other than products, and can operate in ways other than input and output. For example, it many be common defined processes during estimating or scheduling that describe design tasks (resulting in documents), procurement tasks (resulting in construction materials), planning tasks (resulting in processes), etc. Furthermore, the ways in which process can operate on something might include "installs", "finishes", "transports", "removes", etc. The ways are described as operation types.

ISSUE See issue I-310 for changes made in IFC Release 1.5.1.
See issues I-480, I-482 for changes made in IFC Release 2.0.

13.27.2. Attribute and Relationship Definitions

Superclasses and Subclasses

IfcRoot
IfcRelationship
IfcRelProcessOperatesOn

Attributes and Relationships

	Attribute / Relation	Definition	Data or Rel. Type	Min.	Max.	Default
	RelatingProcess	Reference to Process, that handles the Products as input or output.	IfcProcess	n/a	n/a	n/a
	RelatedObject	References to an object, which the process operates on.	IfcObject	n/a	n/a	n/a
	OperationType	Opertation type, defining the kind of operation on the object.	STRING	see type	see type	n/a
	OperationQuantity	Quantitiy of the object specific for the operation by this process.	IfcMeasureWithUnit	see type	see type	n/a

13.27.3. Interface Definitions

- I_RelProcessesProducts

Copyright © International Alliance for Interoperability - 1996-1999

13.28. Class IfcRelSequence

13.28.1. Class Semantic Definition

Definition from IAI: This objectified relationship handles the concatenation of processes over time. The Sequence is defined as relationship between two processes. The related object is the successor of the relating object, being the predecessor. A time lag is assigned to a sequence, and the sequence type defines the way in which the time lag applies to the sequence.

IfcRelSequence is defined as an one-to-one relationship, therefore it assigns one predecessor to one successor. However, each IfcProcess can have multiple predecessors and successors, the sequence relationship is truly N-to-M. Many instances of IfcRelSequence have to be created in order to cope with that.

ISSUE See issues I-093, I-200 for changes made in IFC Release 1.5.
See issue I-310 for changes made in IFC Release 1.5.1.

History

This Entity has changed after IFC Release 1.5.1, please see the Migration Guide for details

13.28.2. Attribute and Relationship Definitions

Superclasses and Subclasses

IfcRoot
IfcRelationship
IfcRelSequence

Attributes and Relationships

	Attribute / Relation	Definition	Data or Rel. Type	Min.	Max.	Default
	RelatingProcess	Reference to the Process, that is the predecessor.	IfcProcess	n/a	n/a	n/a
	RelatedProcess	Reference to the Process, that is the successor.	IfcProcess	n/a	n/a	n/a
	TimeLag	Time Duration of the sequence, it is the time lag between the predecessor and the successor as specified by the SequenceType.	IfcTimeMeasure	see type	see type	n/a
	SequenceType	The way in which the time lag applies to the sequence	IfcSequenceEnum	Start_Start	Finish_Finish	Finish_Start

Formal Propositions

WR31	The RelatingProcess shall not point to the same instance as the RelatedProcess.

13.28.3. Interface Definitions

- I_RelSequence

Copyright © International Alliance for Interoperability - 1996-1999

13.29. Class IfcRelationship

13.29.1. Class Semantic Definition

Definition from IAI: The abstract generalization of all objectified relationships in IFC. Objectified relationships are the preferred way to handle relationships among objects. This allows to keep relationship specific properties directly at the relationship and opens the possibility to later handle relationship specific behavior.

ISSUE See issue I-289 for changes made in IFC Release 1.5.
See issue I-310 for changes made in IFC Release 1.5.1.

13.29.2. Attribute and Relationship Definitions

Superclasses and Subclasses

IfcRoot
IfcRelationship
IfcRelAssemblesElements
IfcRelAssemblesSpaces
IfcRelConnectsElements
IfcRelFillsElement
IfcRelSeparatesSpaces
IfcRelServicesBuildings
IfcRelVoidsElement
IfcRelAdjacencyReq
IfcRelContains
IfcRelNests
IfcRelGroups
IfcRelProcessOperatesOn
IfcRelSequence
IfcRelCoversBldgElements
IfcRelWorkInteraction
IfcRelAggregatesConstraints
IfcRelAssignsProperties
IfcRelAggregatesCrewResources
IfcRelUsesResource
IfcRelConnectsPorts
IfcRelActsUpon
IfcRelAttachesToBoundaries
IfcRelAttachesElements
IfcRelControls

Attributes and Relationships

	Attribute / Relation	Definition	Data or Rel. Type	Min.	Max.	Default
	RelatedIsDependent	Defines whether both sides of the relationship (relating | related) are equal righted, or whether one depends on the other. TRUE means the related object (see naming convention in subtypes) depends on the relating object, FALSE otherwise. If both RelatingIsDependent and RelatedIsDependent are TRUE, then there is a bi-directional dependency.	BOOLEAN	FALSE	TRUE	TRUE
	RelatingIsDependent	TRUE means the relating object (see naming convention in subtypes)	BOOLEAN	FALSE	TRUE	FASLE

Copyright © International Alliance for Interoperability - 1996-1999

		depends on the related object, FALSE otherwise. If both RelatingIsDependent and RelatedIsDependent are TRUE, then there is a bi-directional dependency.				

13.29.3. Interface Definitions

- I_Relationship

13.30. Class IfcResource

13.30.1. Class Semantic Definition

Definition from IAI IfcResource contains the information needed to represent the costs, schedule, and other impacts from the use of a thing in a process. It is not intended to use IfcResource to model the general properties of the things themselves, while an optional linkage from IfcResource to the things to be used can be specified (i.e. the relationship from subtypes of IfcProductResource to IfcProduct).

There are two basic intended use of IfcResource. First, if the attributes of the thing are not needed for the purpose of the use of IfcResource, or the types of things are not explicitly modeled in IFC yet, then the linkage between the resource and the thing doesn't have to be instantiated in the system. That is, the attributes of IfcResource (or its subtypes) alone are sufficient to represent the use of the thing as a resource for the purpose of the project. For example, construction equipment such as earth-moving vehicles or tools are not currently modeled within the IFC. For the purpose of estimating and scheduling, these can be represented using IfcResource alone. Second, if the attributes of the thing are needed for the use of IfcResource objects, and they are modeled explicitly as objects (e.g. classes or properties), then the IfcResource instances can be linked to the instances of the type of the things being referenced. Things that might be used as resources and that are already modeled in the IFC include physical products, people and organizations, and materials.

The IfcResource is defined in the Kernel layer in IFC but are reused and specialized in other schemas.

History

This Entity has changed after IFC Release 1.5.1, please see the Migration Guide for details

13.30.2. Attribute and Relationship Definitions

Superclasses and Subclasses

IfcRoot
  IfcObject
    IfcResource
      IfcProductResource
      IfcConstructionEquipmentResource
      IfcLaborResource
      IfcCrewResource
      IfcConstructionMaterialResource
      IfcSubcontractResource

Attributes and Relationships

	Attribute / Relation	Definition	Data or Rel. Type	Min.	Max.	Default
OPT	Description	Semantic description of the Resource	STRING	n/a	n/a	NIL
	TypeReference	A textual code that identifies the resouce	STRING	n/a	n/a	empty

Copyright © International Alliance for Interoperability - 1996-1999

		type.				string
	TypeName	A textual name that referes to the resource type.	STRING	n/a	n/a	empty string
OPT	Classification	Reference to the access information for classified information. NOTE: not the classified information is referenced, only the unambiguous access to it.	IfcClassificationList	n/a	n/a	0
OPT	ResourceConsumption		IfcResourceConsumptionEnum			
OPT	BaseUnit		IfcMeasureWithUnit			

13.30.3. Interface Definitions

- I_Resource

13.31. Class IfcRoot

13.31.1. Class Semantic Definition

Definition from IAI: Most abstract and root class for all IFC Constructs that roots in the IfcKernel or subsequent levels. It assigns the globally unique ID, and the ownership and history information for the use in all classes defined at this IFC object model layer or at layers above.

ISSUE See issue I-082 for changes made in IFC Release 1.5.

History

This Entity has changed after IFC Release 1.5.1, please see the Migration Guide for details

13.31.2. Attribute and Relationship Definitions

Superclasses and Subclasses

IfcRoot
IfcModelingAid
IfcObject
IfcRelationship
IfcPropertyDefinition

Attributes and Relationships

	Attribute / Relation	Definition	Data or Rel. Type	Min.	Max.	Default
	GlobalId	Assignment of a globally unique identifier within the entire software wolrd.	IfcGloballyUniqueId	n/a	n/a	n/a
	OwnerHistory	Assignment of the information about the current ownership of that object, including owning actor, application, local identification and information captured about the recent changes of the object, NOTE: only the last modification in stored.	IfcOwnerHistory	n/a	n/a	n/a
OPT	Label	Optional label for arbitrary use by the participating software systems or users.	STRING	see type	see type	NIL

Copyright © International Alliance for Interoperability - 1996-1999

Unique Rules

UR1	The UniqueId shall be unique.

13.31.3. Interface Definitions

- I_Root

14. IfcControlExtension

The IfcControlExtension schema in the core layer defines basic concepts for capturing controls related to any object in the IFC model derived from IfcObject. At the present, the available types of IfcControl on IfcObjects are capturing information on general constraints, approvals and maintenance records.

14.1. Select IfcMetricValueSelect

14.1.1. Select Semantic Definition

History

New Select Type in IFC Release 2.0

14.1.2. Select

IfcMeasureWithUnit
IfcTable

14.2. Type IfcAggregatorEnum

14.2.1. Type Semantic Definition

Definition from IAI: Enumeration defining the logical operators for aggregation.

ISSUES: No issues to date.

History

New Enumeration in IFC Release 2.0

14.2.2. Enumeration

LogicalAND
LogicalOR
LogicalXOR
LogicalNOT

Copyright © International Alliance for Interoperability - 1996-1999

14.3. Type IfcApprovalStatusEnum

14.3.1. Type Semantic Definition

Definition from IAI: Enumeration defining the result or current status of the approval process.

ISSUES: No issues to date.

History

New Enumeration in IFC Release 2.0

14.3.2. Enumeration

Submitted
Processed
OnHold
UnDetermined
Approved
UserDefined
NotDefined

14.4. Type IfcBenchmarkEnum

14.4.1. Type Semantic Definition

Definition from IAI: This enumeration is used to qualify a benchmark values.

ISSUES: See I-500 for changes made in IFC Release 2.0 Beta 3.

History

New Enumeration in IFC Release 2.0

14.4.2. Enumeration

GreaterThan
GreaterThanOrEqualTo
LessThan
LessThanOrEqualTo
EqualTo
NotEqualTo
TargetWithTolerance
Range
Other
NotKnown
Unset

Copyright © International Alliance for Interoperability - 1996-1999

14.5. Type IfcConstraintEnum

14.5.1. Type Semantic Definition

Definition from IAI: This enumeration is used to qualify a constraint.

History

New Enumeration in IFC Release 2.0

14.5.2. Enumeration

Hard
Soft
Advisory
NotKnown
Unset

14.6. Type IfcConstraintRelationshipEnum

14.6.1. Type Semantic Definition

Definition from IAI: Enumeration defining the intent of the IfcRelRelatesConstraints relationship object with regard to its related IfcConstraint and IfcObject objects.

ISSUES: See I-498 for changes made in IFC Release 2.0 Beta 3.

History

New Enumeration in IFC Release 2.0

14.6.2. Enumeration

Rationale
ExpectedPerformance
Other
NotKnown
Unset

14.7. Type IfcElementConditionEnum

14.7.1. Type Semantic Definition

Definition from IAI: This enumeration defines the condition of the subject (IfcProduct) of maintenance.

History

New Enumeration in IFC Release 2.0

14.7.2. Enumeration

GoodCondition

Copyright © International Alliance for Interoperability - 1996-1999

RequiresMonitoring
RequiresRoutineMaintenance
RequiresService
RequiresRepair
RequiresReplacement
Other
UserDefined
NotDefined

14.8. Type IfcMaintenanceTypeEnum

14.8.1. Type Semantic Definition

Definition from IAI: This enumeration is used to identify the different types of maintenance performed on IfcProduct.

History

New Enumeration in IFC Release 2.0

14.8.2. Enumeration

Inspection
Service
Repair
Replace
UserDefined
NotDefined

14.9. Type IfcMetricDataEnum

14.9.1. Type Semantic Definition

Definition from IAI: This enumeration is used to identify the different data types for IfcMetric values.

ISSUES: See I-499 for changes made in IFC Release 2.0 Beta 3.

History

New Enumeration in IFC Release 2.0

14.9.2. Enumeration

Scalar
Vector
TimeSeries
Table
Graph
Distribution
UserDefined
NotDefined

Copyright © International Alliance for Interoperability - 1996-1999

14.10. Type IfcObjectiveEnum

14.10.1. Type Semantic Definition

Definition from IAI: This enumeration is used to qualify an objective.

History

New Enumeration in IFC Release 2.0

14.10.2. Enumeration

CodeCompliance
DesignIntent
Other
NotKnown
Unset

14.11. Class IfcApproval

14.11.1. Class Semantic Definition

This class represents information about approval processes for a plan, a design, a proposal, a change order, etc, in a construction or facilities management project. IfcApproval is a subtype of IfcControl and it can be related to IfcObjects through appropriate subtype of IfcRelControls.

History

New Entity in IFC Release 2.0

14.11.2. Attribute and Relationship Definitions

Superclasses and Subclasses

IfcRoot
  IfcObject
    IfcControl
      IfcApproval

Attributes and Relationships

	Attribute / Relation	Definition	Data or Rel. Type	Min.	Max.	Default
	Description	A general textural description of a design, work task, plan, etc. that is being approved for.	STRING	Empty string	N/a	Empty string
OPT	AuthorizingAgent	The person or organization that has the authority to issue and approve the request	IfcActorSelect	see type	see type	see type
	RequestFrom	Person who requests the approval	IfcActorSelect	see type	see type	see type
	RequestTo	Person who is asked for approval	IfcActorSelect	see type	see type	see type
	RequestingDate	The date issuing the request	IfcDateTimeSelect	see type	see type	see type
OPT	RequestedDate	The date requested that approval need to be determined	IfcDateTimeSelect	see type	see type	see type

Copyright © International Alliance for Interoperability - 1996-1999

OPT	ApprovalDate	Date that the result of the approval process is produced	IfcDateTimeSelect	see type	see type	see type
OPT	ApprovalStatus	The result or current status of the approval process	IfcApprovalStatusEnum	Submitted	Unknown	Submitted
OPT	ApprovalConstraint	Additional constraints on the approval	STRING	Empty string	N/a	Empty string

14.11.3. Interface Definitions

- I_Approval

14.12. Class IfcConstraint

14.12.1. Class Semantic Definition

Definition from IAI: This class is used to define general information appropriate for all constraints. IfcConstraint is a subtype of IfcControl and it can be related to IfcObjects through appropriate subtype of IfcRelControls.

History

New Entity in IFC Release 2.0

14.12.2. Attribute and Relationship Definitions

Superclasses and Subclasses

IfcRoot
  IfcObject
    IfcControl
      IfcConstraint
        IfcObjective
        IfcMetric

Attributes and Relationships

	Attribute / Relation	Definition	Data or Rel. Type	Min.	Max.	Default
	ConstraintGrade	Enumeration that qualifies the type of constraint.	IfcConstraintEnum	Hard	Unset	Hard
OPT	Description	A textual description of the constraint.	STRING	see type	see type	empty string
OPT	Source	Any source material, such as a code or standard, from which the constraint originated.	STRING	see type	see type	empty string
INV	Aggregates	Reference to the relationships that collect other constraints into this aggregate constraint.	SET [0:?] OF IfcRelAggregatesConstraints	n/a	n/a	NIL
INV	IsAggregatedIn	Reference to the relationships that relate this constraint into aggregate constraints.	SET [0:?] OF IfcRelAggregatesConstraints	n/a	n/a	NIL

Copyright © International Alliance for Interoperability - 1996-1999

14.12.3. Interface Definitions

- I_Constraint

14.12.4. Geometry Use Definitions

This class has no geometric representation.

14.13. Class IfcMaintenanceRecord

14.13.1. Class Semantic Definition

This class provides a mechanism to record detailed information about each maintenance task performed on an element in a building, if particular, IfcBuildingElement. For each maintenace occurence, an instance of IfcMaintenanceRecord should be created in the computer system and associated to the building elements that received the maintenance. This class also has the capability to track maintenance history by referencing the instance of the same class for the last maintenance on the same building element. IfcMaintenanceRecord is a subtype of IfcControl and it can be related to IfcObjects through appropriate subtype of IfcRelControls.

History

New Entity in IFC Release 2.0

14.13.2. Attribute and Relationship Definitions

Superclasses and Subclasses

IfcRoot
IfcObject
IfcControl
IfcMaintenanceRecord

Attributes and Relationships

	Attribute / Relation	Definition	Data or Rel. Type	Min.	Max.	Default
	MaintenanceDate	The date when this maintenance is performed.	IfcDateTimeSelect	See type	See type	See type
	MaintenanceType	The type of maintenance performed.	IfcMaintenanceTypeEnum	Inspection	Other	Inspection
	StandardMaintenanceTypes	This attribute refers to a set of standard maintenace types defined by the manufacturer meaning that the task performed is based on the standard maintenance types.	SET [0:?] OF IfcMaintenanceType	N/a	N/a	N/a
OPT	LastRecord	This references to the maintenance record of the last maintenance task. This provides a mechanism to track maintenance history.	IfcMaintenanceRecord	See type	See type	See type
OPT	MaintenanceActor	The person or organization unit who is responsible for the maintenance task.	IfcActorSelect	See type	See type	See type
OPT	MaintenanceDuration	The time duration that the maintenance work actually take.	IfcTimeMeasure	See type	See type	See type
OPT	MaintenanceCost	This captures the detailed cost	IfcCostSchedule	See type	See type	See type

Copyright © International Alliance for Interoperability - 1996-1999

		information for the maintenance. Each item of the IfcCostSchedule represents the context of each sub-cost, such as parts, labor, tax, etc.				
OPT	CurrentCondition	This records the condition after the maintenance is performed.	IfcElementConditionEnum	GoodCondition	Unset	GoodCondition
OPT	Remark	This records any remark, comments made by the maintenance actor, or owner, etc.	STRING	Empty string	N/a	Empty string

14.13.3. Interface Definitions

- I_MaintenanceRecord

14.13.4. Geometry Use Definitions

Instances of this class have no physical presence and therefore no geometric representation.

14.14. Class IfcMaintenanceType

14.14.1. Class Semantic Definition

This class represents a standard type of maintenance usually provided construction companies, suppliers or manufacturers of the elements that require the maintenance. It specifies the requirements of the standard maintenance required such as job description, normal period between each of such type of maintenance, etc. The IfcMaintenanceRecord can also reference to an instance of IfcMaintenanceType to indicates the type of the maintenance performed. IfcMaintenanceType is a subtype of IfcControl and it can be related to IfcObjects through appropriate subtype of IfcRelControls.

History

New Entity in IFC Release 2.0

14.14.2. Attribute and Relationship Definitions

Superclasses and Subclasses

IfcRoot
  IfcObject
    IfcControl
      IfcMaintenanceType

Attributes and Relationships

	Attribute / Relation	Definition	Data or Rel. Type	Min.	Max.	Default
	MaintenanceTypeID	The ID of this type of standard maintenance given by the manufacturer	STRING	empty string	n/a	empty string
	MaintenanceTypeName	The name of this type of standard maintenance given by the manufacturer	STRING	empty string	n/a	empty string
OPT	MaintenanceObjectType	The class name of type of objects that this maintenance type applies.	STRING	empty string	n/a	empty string
OPT	MaintenanceDescription	Any descriptions, notes, requirements,	STRING	empty	n/a	empty

Copyright © International Alliance for Interoperability - 1996-1999

		methods, etc that the manufacturer stipulates for this type of standard maintenance.		string		string
OPT	Manufacturer	The manufacturer that has defined the type of this maintenance standard.	IfcOrganization	See type	See type	See type
OPT	MaintenancePeriod	The normally required period when such type of maintenance should be done once. This is stipulated by the manufacturer.	IfcTimeMeasure	see type	see type	see type
OPT	MaintenanceDuration	The normally required duration this type of maintenance work will take.	IfcTimeMeasure	See type	See type	See type

14.14.3. Interface Definitions

- I_MaintenanceType

14.14.4. Geometry Use Definitions

Instances of this class have no physical presence and therefore no geometric representation.

14.15. Class IfcMetric

14.15.1. Class Semantic Definition

Definition from IAI: This class is used to capture quantitative resultant metrics that can be applied to objectives. IfcMetric is a subtype of IfcConstraint and it can be related to IfcObjects through appropriate subtype of IfcRelControls.

ISSUES: See I-501 for changes made in IFC Release 2.0 Beta 3.

History

New Entity in IFC Release 2.0

14.15.2. Attribute and Relationship Definitions

Superclasses and Subclasses

IfcRoot
  IfcObject
    IfcControl
      IfcConstraint
        IfcMetric
          IfcMetricBenchmark

Attributes and Relationships

No attributes defined at this level.

14.15.3. Interface Definitions

- I_Metric

Copyright © International Alliance for Interoperability - 1996-1999

14.15.4. Geometry Use Definitions

This class has no geometric representation.

14.16. Class IfcMetricBenchmark

14.16.1. Class Semantic Definition

Definition from IAI: This class is used to capture quantitative benchmark metrics that can be applied to objectives. IfcMetricBenchmark is a subtype of IfcMetric and it can be related to IfcObjects through appropriate subtype of IfcRelControls.

ISSUES: See I-500 for changes made in IFC Release 2.0 Beta 3.

History

New Entity in IFC Release 2.0

14.16.2. Attribute and Relationship Definitions

Superclasses and Subclasses

IfcRoot
IfcObject
IfcControl
IfcConstraint
IfcMetric
IfcMetricBenchmark

Attributes and Relationships

	Attribute / Relation	Definition	Data or Rel. Type	Min.	Max.	Default
	Benchmark	Enumeration that identifies the type of benchmark data.	IfcBenchmarkEnum	Target	Unset	Target

14.16.3. Interface Definitions

- I_MetricBenchmark

14.16.4. Geometry Use Definitions

This class has no geometric representation.

14.17. Class IfcMetricValue

14.17.1. Class Semantic Definition

Definition from IAI: This class is used to wrap the values, with datatype and source, used by IfcMetric and its subtypes. As IfcmetricValue is a subtype of IfcPropertyDefinition, the assignment of the metric values to IfcMetric and its subtypes is done by IfcRelAssignsProperties.

ISSUES: See I-501 for changes made in IFC Release 2.0 Beta 3.

Copyright © International Alliance for Interoperability - 1996-1999

History

New Entity in IFC Release 2.0

14.17.2. Attribute and Relationship Definitions

Superclasses and Subclasses

IfcRoot
  IfcPropertyDefinition
    IfcMetricValue

Attributes and Relationships

	Attribute / Relation	Definition	Data or Rel. Type	Min.	Max.	Default
	DataType	Enumeration that identifies the data type of the DataValue attribute	IfcMetricDataEnum	Scalar	Unset	Scalar
	DataValue	Value with data type defined by the DataType enumeration.	IfcMetricValueSelect	n/a	n/a	NIL
	ValueSource	Reference source for data values	STRINGIfcString	see type	see type	empty string

14.17.3. Interface Definitions

- I_Metric

14.18. Class IfcObjective

14.18.1. Class Semantic Definition

Definition from IAI: This class is used to capture qualitative information for an objective-based constraint. IfcObjective is a subtype of IfcConstraint and it can be related to IfcObjects through appropriate subtype of IfcRelControls.

History

New Entity in IFC Release 2.0

14.18.2. Attribute and Relationship Definitions

Superclasses and Subclasses

IfcRoot
  IfcObject
    IfcControl
      IfcConstraint
        IfcObjective

Attributes and Relationships

	Attribute / Relation	Definition	Data or Rel. Type	Min.	Max.	Default
	Objective	Enumeration that qualifies the type of objective.	IfcObjectiveEnum	CodeCompliance	Unset	CodeCompliance
	BenchmarkValues	A list of any benchmark values used for	LIST [0:?] OF IfcMetric	n/a	n/a	NIL

Copyright © International Alliance for Interoperability - 1996-1999

		comparison purposes.				
	ResultValues	A list of any resultant values used for comparision purposes.	LIST [0:?] OF IfcMetric	n/a	n/a	NIL

14.18.3. Interface Definitions

- I_Objective

14.18.4. Geometry Use Definitions

This class has no geometric representation.

14.19. Class IfcRelAggregatesConstraints

14.19.1. Class Semantic Definition

Definition from IAI: An objectified relationship which allows IfcConstraints and their subtypes to be aggregated together logically.

ISSUES: See I-497 and I-580 for changes made in IFC Release 2.0 Beta 3.

History

New Entity in IFC Release 2.0

14.19.2. Attribute and Relationship Definitions

Superclasses and Subclasses

IfcRoot
  IfcRelationship
    IfcRelAggregatesConstraints

Attributes and Relationships

	Attribute / Relation	Definition	Data or Rel. Type	Min.	Max.	Default
	LogicalAggregator	Enumeration that identifies the logical type of aggregation.	IfcAggregatorEnum	Scalar	Unset	Scalar
	RelatingConstraint	Constraint that is aggregated using the LogicalAggregator.	IfcConstraint	n/a	n/a	NIL
	RelatedConstraints	Constraints that are aggregated in using the LogicalAggregator.	LIST [1:?] OF IfcConstraint	n/a	n/a	NIL

Formal Propositions

WR31	The instance to which the relation RelatingConstraint points shall not be contained in the List of RelatedConstraints.

Informal Propositions

IP31	The IfcRelAggregatesConstraints relationship shall be defined acyclic.

14.19.3. Interface Definitions

- I_RelAggregatesConstraints

Copyright © International Alliance for Interoperability - 1996-1999

14.19.4. Geometry Use Definitions

This class has no geometric representation.

14.20. Class IfcRelAssignsApprovals

14.20.1. Class Semantic Definition

Definition from IAI: An objectified relationship which allows IfcApprovals to be related to any IfcObject.

History

New Entity in IFC Release 2.0

14.20.2. Attribute and Relationship Definitions

Superclasses and Subclasses

IfcRoot
  IfcRelationship
    IfcRelControls
      IfcRelAssignsApprovals

Attributes and Relationships

No attributes defined at this level.

Formal Propositions

WR41	This subtype of IfcRelControls shall be used to apply only approval kind of controls on IfcObjects.

14.20.3. Interface Definitions

- I_RelAssignsApprovals

14.20.4. Geometry Use Definitions

This class has no geometric representation.

14.21. Class IfcRelControlsMaintenance

14.21.1. Class Semantic Definition

Definition from IAI: An objectified relationship which allows controls of type IfcMaintenanceRecord or IfcMaintenanceType to be related to any IfcProduct.

ISSUES: See I-497 and I-580 for changes made in IFC Release 2.0 Beta 3.

History

New Entity in IFC Release 2.0

Copyright © International Alliance for Interoperability - 1996-1999

14.21.2. Attribute and Relationship Definitions

Superclasses and Subclasses

IfcRoot
IfcRelationship
IfcRelControls
IfcRelControlsMaintenance

Attributes and Relationships

No attributes defined at this level.

Formal Propositions

WR41	This subtype of IfcRelControls shall be used to apply only maintenance record or maintenance type kind of controls on IfcProducts.

14.21.3. Interface Definitions

- I_RelControlsMaintenance

14.21.4. Geometry Use Definitions

This class has no geometric representation.

14.22. Class IfcRelRelatesConstraints

14.22.1. Class Semantic Definition

Definition from IAI: An objectified relationship which allows IfcConstraints and their subtypes to be related to any IfcObject, as well as defining the intent of the constraint.

ISSUES: See I-497 and I-580 for changes made in IFC Release 2.0 Beta 3.

History

New Entity in IFC Release 2.0

14.22.2. Attribute and Relationship Definitions

Superclasses and Subclasses

IfcRoot
IfcRelationship
IfcRelControls
IfcRelRelatesConstraints

Attributes and Relationships

	Attribute / Relation	Definition	Data or Rel. Type	Min.	Max.	Default
	ConstraintRelationship	Enumeration that qualifies the type of relationship between constraints and objects in the model.	IfcConstraintRelationshipEnum	Rationale	Unset	Rationale

Copyright © International Alliance for Interoperability - 1996-1999

Formal Propositions

WR41	This subtype of IfcRelControls shall be used to apply only constraint kind of controls on IfcObjects.

14.22.3. Interface Definitions

- I_RelRelatesConstraints

14.22.4. Geometry Use Definitions

This class has no geometric representation.

15. IfcModelingAidExtension

Core extensions, as the name implies, provide extensions to concepts rooted in the kernel. Thus, Core extensions are the first refinement layer for abstract kernel constructs. Each core extension is a specialization of classes defined in the Kernel.

The IfcModelingAidExtension schema defines basic object concepts used as aids in the development of project models, particularly those related to geometric placement, alignment or constraint. Therefore, these “aids”, or helper objects, do not include primary elements defining the model, but provide references for the definition of such primary elements (which are generally defined in other Core Extension schemata).

15.1. Select IfcReferenceCurveSelect

15.1.1. Select Semantic Definition

Definition from IAI: IfcReferenceCurveSelect is a select type which enables selection of reference geometry curve alternatives. Such curves can be used as modeling aids in the placement and alignment of other objects.

15.1.2. Select

IfcReferenceCurve
IfcGridAxis

15.2. Select IfcReferencePointSelect

15.2.1. Select Semantic Definition

Definition from IAI: IfcReferencePointSelect is a select type which enables selection of reference geometry point alternatives. Such points can be used as modeling aids in the placement and alignment of other objects.

15.2.2. Select

IfcGridIntersection
IfcReferencePoint

Copyright © International Alliance for Interoperability - 1996-1999

15.3. Class IfcConstrainedPlacement

15.3.1. Class Semantic Definition

Definition from IAI: Provides a specialization of IfcLocalPlacement in which placement is limited (controlled) by one or more constraints. In this release, there is a single type of constraint introduced: IfcConstraintRelIntersection.

ISSUES: See I-139, IfcPlacementConstraint and IfcConstraintRelIntersection for related discussion.

15.3.2. Attribute and Relationship Definitions

Superclasses and Subclasses

IfcRoot
  IfcModelingAid
    IfcLocalPlacement
      IfcConstrainedPlacement

Attributes and Relationships

	Attribute / Relation	Definition	Data or Rel. Type	Min.	Max.	Default
	PathEndPointsConstraint	A constraint on one or both ends of the path for an ExtrudedSolid	LIST [1:2] OF IfcPlacementConstraint	see type	see type	n/a

15.3.3. Interface Definitions

- I_ConstrainedPlacement

15.3.4. Geometry Use Definitions

This class has no geometry.

15.4. Class IfcConstraintRelIntersection

15.4.1. Class Semantic Definition

Definition from IAI: Objects of this type provide a constraint that can be used to control the local placement of Products, Modeling Aids and Proxy objects. Specifically, objects of this type constrain an end point of the path for an IfcAttDrivenExtrudedSolid by defining offsets from a Reference point on a reference Path. Generally this will be used to locate an endpoint for such paths relative to intersections in a Design Grid.

This is the only placement constraint introduced in this IFC Release. However, other constraints, relative to Reference Curves and Reference Surfaces are planned in future releases.

ISSUES: See I-139, IfcConstrainedPlacement and IfcPlacementConstraint for related discussion.

15.4.2. Attribute and Relationship Definitions

Superclasses and Subclasses

IfcRoot
  IfcModelingAid
    IfcPlacementConstraint

Copyright © International Alliance for Interoperability - 1996-1999

IfcConstraintRelIntersection

Attributes and Relationships

	Attribute / Relation	Definition	Data or Rel. Type	Min.	Max.	Default
	RefPointAt	Intersection, relative to which the Path endpoint will be located	IfcReferencePointSelect	n/a	n/a	NIL
	OffsetFromCurves	Reference curves from which fixed offsets are defined in OffsetDistances	LIST [0:3] OF IfcReferenceCurveSelect	n/a	n/a	NIL
	OffsetDistances	Fixed offset distances from reference lines. Note that if one offset is provided, there are two degrees of free movement; if two offsets are defined, there is still one degree of free movement; if all three offsets (and curves are defined, the placement is fully constrained	LIST [0:3] OF IfcLengthMeasure	n/a	n/a	NIL

15.4.3. Interface Definitions

- I_ConstraintRelIntersection

15.4.4. Geometry Use Definitions

This class has no geometry.

15.5. Class IfcDesignGrid

15.5.1. Class Semantic Definition

Definition from IAI: A 3D grid used as an aid in locating structural and design elements. An IfcDesignGrid contain a list of IfcGridLevels – which contain IfcGridAxes and IfcGridIntersections. All of these objects define a grid system, relative to which project objects will be placed.

History

This Entity has changed after IFC Release 1.5.1, please see the Migration Guide for details

15.5.2. Attribute and Relationship Definitions

Superclasses and Subclasses

IfcRoot
  IfcModelingAid
    IfcDesignGrid

Attributes and Relationships

	Attribute / Relation	Definition	Data or Rel. Type	Min.	Max.	Default
OPT	GridPurpose	Descriptive purpose of the grid. NOTE: this grid can be orthogonal, angular, polar, and include different 2D grids on each level. It can be used for a structural grid, planning grid, or any type of grid to which objects will be aligned.	STRING	n/a	n/a	emptry string

Copyright © International Alliance for Interoperability - 1996-1999

	LocalPlacement	Origin and orientation for this grid - relative to another object. Establishes the Local Coordinate System relative to the Coordinate System referenced in "PlacementRelativeTo"	IfcLocalPlacement	n/a	n/a	NIL
INV	HasGridLevels	Set of inverse relationships to Grid Levels. Inverse for PartOfDesignGrid	SET [1:?] OF IfcGridLevel	n/a	n/a	NIL

15.5.3. Interface Definitions

- I_DesignGridGeneral
- I_Placement

15.5.4. Geometry Use Definitions

The IfcDesignGrid does not include geometry directly, other than the coordinating reference geometry placement used by all grid elements contained (e.g. the contained IfcGridLevels (Axes and Intersections)).

Object Geometry in Context

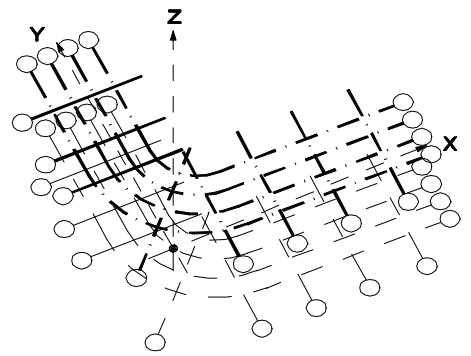	Contained grid elements geometry example

Reference Geometry

The IfcAxis2Placement is used to define the common local object coordinate system for multiple shape representations for this class: The reference placement is defined by:

- Parameters IfcDesignGrid.LocalPlacement
- Type IfcLocalPlacement

Standard 3D Geometric Representation

All geometry for this object is defined in the contained objects (grid level and grid axes), all of which are placed relative to the reference geometry defined above.

15.6. Class IfcGridAxis

15.6.1. Class Semantic Definition

Definition from IAI: An individual Axis in a Design Grid. In this release, Axes use an IfcBoundedCurve for geometry.

History

This Entity has changed after IFC Release 1.5.1, please see the Migration Guide for details

Copyright © International Alliance for Interoperability - 1996-1999

15.6.2. Attribute and Relationship Definitions

Superclasses and Subclasses

IfcRoot
IfcModelingAid
IfcGridAxis

Attributes and Relationships

	Attribute / Relation	Definition	Data or Rel. Type	Min.	Max.	Default
	PartOfGridLevel	Elevation for this grid axis, relative to the origin for this grid	IfcGridLevel	see type	see type	n/a
OPT	AxisTag	The tag or name for this grid axis	STRING	see type	see type	empty string
	AxisCurve	BoundedCurve which provides the geometry for this Grid Axis	IfcBoundedCurve	see type	see type	Line from 0,0,0 to 1,1,0
	SameSenseAsBaseCurve	Defines whether the original sense of curve is used or whether it is reversed in the context of the grid	BOOLEAN	see type	see type	TRUE
INV	AlignedGridIntersections	Inverse relationship to Intersections aligned with this Axis. Inverse for AlignedWithAxes.	SET [0:?] OF IfcGridIntersection	see type	see type	NIL

15.6.3. Interface Definitions

- I_GridAxis

15.6.4. Geometry Use Definitions

Object Geometry in Context

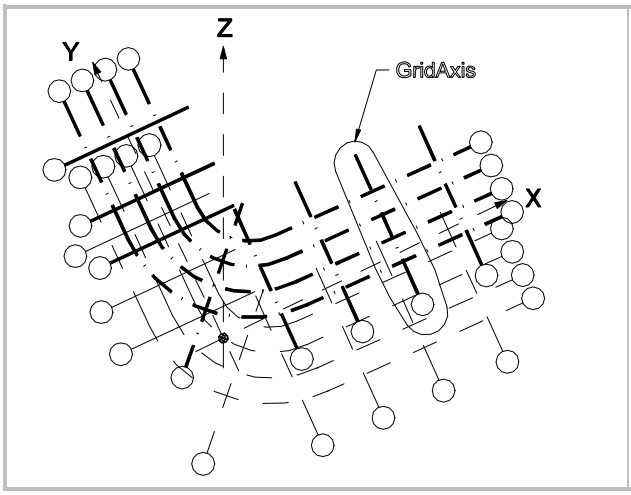

IfcGridAxis – shown in context of complete IfcDesignGrid

Reference Geometry

This class does not define its own reference placement, it refers to the placement in the container IfcDesignGrid.

Standard 3D Geometric Representation

IfcGridAxis uses an IfcBoundedCurve entity for its geometry.

Copyright © International Alliance for Interoperability - 1996-1999

15.7. Class IfcGridIntersection

15.7.1. Class Semantic Definition

Definition from IAI: An Individual intersection of two or more Grid Axes at a 3D point in space. This point is represented by a Cartesian Point.

15.7.2. Attribute and Relationship Definitions

Superclasses and Subclasses

IfcRoot
  IfcModelingAid
    IfcGridIntersection

Attributes and Relationships

	Attribute / Relation	Definition	Data or Rel. Type	Min.	Max.	Default
	AlignedWithAxes	Set of relationships to 2 or more grid axes for which this point is an intersection	SET [2:?] OF IfcGridAxis	see type	see type	n/a
	IntersectionPoint	3D geometric point at the intersection of 2 or more Grid Axes.	IfcCartesianPoint	see type	see type	0.,0.,0.

15.7.3. Interface Definitions

- I_GridIntersection

15.7.4. Geometry Use Definitions

Object Geometry in Context

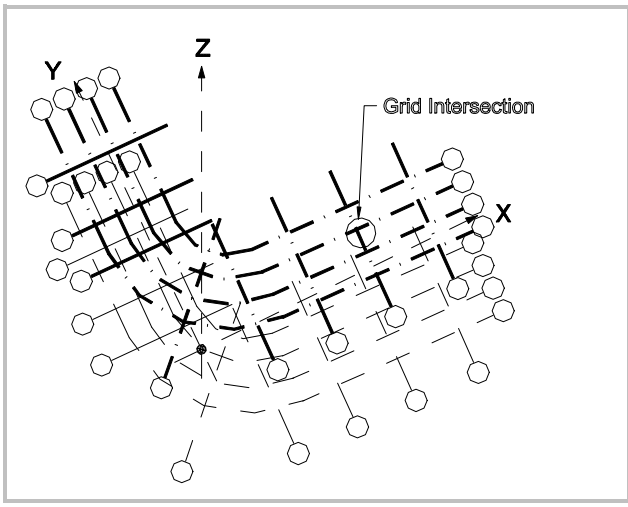

IfcGridIntersection shown in the context of an IfcDesignGrid.

Reference Geometry

This class does not define its own reference placement, it refers to the placement in the container IfcDesignGrid.

Copyright © International Alliance for Interoperability - 1996-1999

Standard 3D Geometric Representation

IfcGridIntersection uses an IfcCartesianPoint entity for its geometry.

15.8. Class IfcGridLevel

15.8.1. Class Semantic Definition

Definition from IAI: An XY planar Level in a 3D Design Grid. IfcGridLevel contains a list of IfcGridAxes

History

This Entity has changed after IFC Release 1.5.1, please see the Migration Guide for details

15.8.2. Attribute and Relationship Definitions

Superclasses and Subclasses

IfcRoot
IfcModelingAid
IfcGridLevel

Attributes and Relationships

	Attribute / Relation	Definition	Data or Rel. Type	Min.	Max.	Default
	PartOfDesignGrid	Relationship of this Grid Level to the Design Grid for which it is a part	IfcDesignGrid	see type	see type	n/a
OPT	GridLevelHeight	Elevation for this grid level, relative to the origin for the IfcDesignGrid to which this level belongs	IfcLengthMeasure	see type	see type	0
OPT	GridLevelName	Description for this level in the grid (e.g. Floor 1, Floor 3-mechanical, Penthouse)	STRING	see type	see type	empty string
INV	HasGridAxes	Set of relationships to Grid Axes that are part of this grid level. Inverse for PartOfGridLevel	SET [1:?] OF IfcGridAxis	see type	see type	n/a

15.8.3. Interface Definitions

- I_GridLevel

15.8.4. Geometry Use Definitions

IfcGridLevel does not include geometry directly. However, it does contain a list of IfcGridAxis elements, each of which has geometry.

Copyright © International Alliance for Interoperability - 1996-1999

Object Geometry in Context

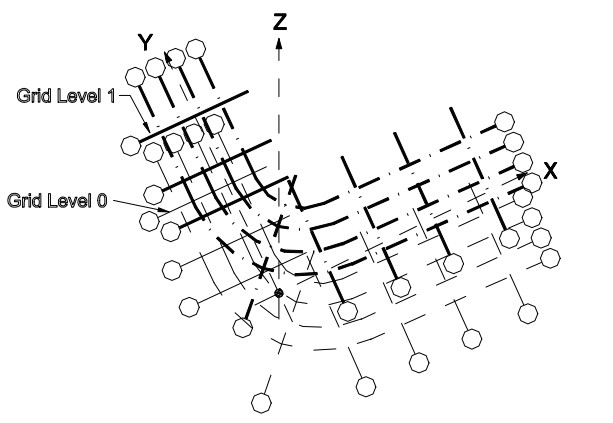	IfcGridLevel shown in the context of an IfcDesignGrid.

Reference Geometry

This class does not define its own reference placement, it refers to the placement in the container IfcDesignGrid.

Standard 3D Geometric Representation

All geometry for this object is defined in the contained objects (grid axes and intersections).

15.9. Class IfcLightSource

15.9.1. Class Semantic Definition

Definition from IAI: An object representing a source of light (e.g. the Sun or an electrical light fixture). Note: geometry for that light source will be defined on the physical object which references this object (e.g. IfcLightFixture).

History

New Entity in IFC Release 2.0

15.9.2. Attribute and Relationship Definitions

Superclasses and Subclasses

IfcRoot
  IfcModelingAid
    IfcLightSource

Attributes and Relationships

	Attribute / Relation	Definition	Data or Rel. Type	Min.	Max.	Default
	SpectralPowerDistribution	List of Power/Wavelength value pairs	LIST [1:?] OF IfcMeasureWithUnit	n/a	n/a	n/a
	PhotometricOutputDistribution	List of Intensity/VolumeMeasure	LIST [1:?] OF IfcPhotometricOutputSpace	n/a	n/a	n/a

15.9.3. Interface Definitions

- I_Luminaire

Copyright © International Alliance for Interoperability - 1996-1999

15.9.4. Geometry Use Definitions

IfcLightSource does not include geometry directly. Instead, geometry is defined by the physical objects which contain it (e.g. IfcLightFixture).

15.10. Class IfcPhotometricOutputSpace

15.10.1. Class Semantic Definition

Definition from IAI: Space around a luminaire to which a specified average light intensity is radiated..

History

New Entity in IFC Release 2.0

15.10.2. Attribute and Relationship Definitions

Superclasses and Subclasses

IfcRoot
  IfcModelingAid
    IfcPhotometricOutputSpace

Attributes and Relationships

	Attribute / Relation	Definition	Data or Rel. Type	Min.	Max.	Default
	OutputSpace	3D space through which light is cast by the light source. Placement should be relative to the placement of the light source.	IfcSolidModel	n/a	n/a	n/a
	OutputIntensity	Light intensity for this space	IfcLuminousIntensityMeasure	n/a	n/a	n/a

15.10.3. Interface Definitions

- I_PhotometricOutputSpace

15.10.4. Geometry Use Definitions

Geometry for this object is defined by the contained space object.

Object Geometry in Context

	3D volume (space) in which luminous output intensity from the associated light source is equal.

Reference Geometry

Reference geometry for this object (placement) is provided by the light source object to which it is related (e.g. IfcLightFixture). This geometry is defined relative to the placement for this light source object.

Standard 3D Geometric Representation

An IfcSolidModel is used to represent the 3D volume.

Copyright © International Alliance for Interoperability - 1996-1999

15.11. Class IfcPlacementConstraint

15.11.1. Class Semantic Definition

Definition from IAI: Provides an abstract supertype for multiple types of constraints on placement definitions for Products, Modeling Aids and Proxys.

In this IFC release, there is only a single type of constraint introduced: IfcConstraintRelIntersection. However, this supertype has been provided for upward compatibility. This will enable the introduction of other constraints on placement (relative to curves and surfaces) in future releases.

ISSUES: See I-139 and IfcConstrainedPlacement for discussion.

15.11.2. Attribute and Relationship Definitions

Superclasses and Subclasses

IfcRoot
  IfcModelingAid
    IfcPlacementConstraint
      IfcConstraintRelIntersection

Attributes and Relationships

No attributes defined at this level.

15.11.3. Interface Definitions

- I_PlacementConstraint

15.11.4. Geometry Use Definitions

15.12. Class IfcReferenceCurve

15.12.1. Class Semantic Definition

Definition from IAI: Objects of this type provide a reference IfcObject (a 3D curve) relative to which Products and Proxys can be placed. It will typically be used as a Curve (or line) in space that has some significance to the designer; a symmetry line for example. A curve which can be used to constrain the placement of primary model elements (IfcProducts) through the use of IfcConstrainedPlacement. Two other such reference object classes have been included in this IFC release: IfcReferencePoint and IfcReferenceSurface.

ISSUES: See I-138, IfcReferencePoint and IfcReferenceSurface for related discussion.

15.12.2. Attribute and Relationship Definitions

Superclasses and Subclasses

IfcRoot
  IfcModelingAid
    IfcReferenceGeometryAid
      IfcReferenceCurve

Copyright © International Alliance for Interoperability - 1996-1999

Attributes and Relationships

	Attribute / Relation	Definition	Data or Rel. Type	Min.	Max.	Default
	ReferenceCurve	3D geometric curve which can be used as a modeling Aid in the placement of other objects.	IfcBoundedCurve	see type	see type	Polyline from 0,0,0 to 1,1,0

15.12.3. Interface Definitions

- I_ReferenceCurve

15.12.4. Geometry Use Definitions

Standard 3D Geometric Representation

An IfcBoundedCurve is used as the geometry representation.

15.13. Class IfcReferenceGeometryAid

15.13.1. Class Semantic Definition

Definition from IAI: Supertype for various types of reference geometry entities with 'LocalPlacement' (provided by this class) that can be used to aid or constrain placement or alignment of other objects.

ISSUES: See I-138, IfcReferenceCurve and IfcReferenceSurface for related discussion.

15.13.2. Attribute and Relationship Definitions

Superclasses and Subclasses

IfcRoot
  IfcModelingAid
    IfcReferenceGeometryAid
      IfcReferenceCurve
      IfcReferencePoint
      IfcReferenceSurface

Attributes and Relationships

	Attribute / Relation	Definition	Data or Rel. Type	Min.	Max.	Default
	LocalPlacement	Placement, relative to another object in the project	IfcLocalPlacement	see type	see type	@0,0,0

15.13.3. Interface Definitions

- I_Placement

15.13.4. Geometry Use Definitions

This abstract class does not include geometry directly, other than the coordinating reference geometry placement inherited by all subtypes.

Copyright © International Alliance for Interoperability - 1996-1999

Reference Geometry

The IfcAxis2Placement is used to define the common local object coordinate system for multiple shape representations for this class: The reference placement is defined by:

- Parameters IfcReferenceGeometryAid.LocalPlacement
- Type IfcLocalPlacement

15.14. Class IfcReferencePoint

15.14.1. Class Semantic Definition

Definition from IAI: Objects of this type provide a reference IfcObject (a 3D point) relative to which Products and Proxys can be placed. It will typically be used as a point in space that has some significance to the designer. A point which can be used to constrain the placement of primary model elements (IfcProduct) through the use of IfcConstrainedPlacement. Two other such reference object classes have been included in this IFC release: IfcReferenceCurve and IfcReferenceSurface.

ISSUES: See I-138, IfcReferenceCurve and IfcReferenceSurface for related discussion.

15.14.2. Attribute and Relationship Definitions

Superclasses and Subclasses

IfcRoot
IfcModelingAid
IfcReferenceGeometryAid
IfcReferencePoint

Attributes and Relationships

	Attribute / Relation	Definition	Data or Rel. Type	Min.	Max.	Default
	ReferencePoint	3D geometric point	IfcCartesianPoint	see type	see type	0,0,0

15.14.3. Interface Definitions

- I_ReferencePoint

15.14.4. Geometry Use Definitions

Standard 3D Geometric Representation

An IfcCartesianPoint is used as the geometry representation.

15.15. Class IfcReferenceSurface

15.15.1. Class Semantic Definition

Definition from IAI: Objects of this type provide a reference IfcObject (a 3D curve) relative to which Products and Proxys can be placed. It will typically be used as a surface in space that has some significance to the designer; a planar surface for example. A surface which can be used to constrain the placement of primary model elements (IfcProducts) through the use of IfcConstrainedPlacement. Two other such reference object classes have been included in this IFC release: IfcReferencePoint and IfcReferenceSurface.

ISSUES: See I-138, IfcReferenceCurve and IfcReferencePoint for related discussion.

Copyright © International Alliance for Interoperability - 1996-1999

15.15.2. Attribute and Relationship Definitions

Superclasses and Subclasses

IfcRoot
IfcModelingAid
IfcReferenceGeometryAid
IfcReferenceSurface

Attributes and Relationships

	Attribute / Relation	Definition	Data or Rel. Type	Min.	Max.	Default
	ReferenceSurface	3D geometric Surface	IfcSurface	see type	see type	Plane Position at 0,0,0. and Normal 0,0,1

15.15.3. Interface Definitions

- I_ReferenceSurface

15.15.4. Geometry Use Definitions

Standard 3D Geometric Representation

An IfcSurface is used as the geometry representation.

16. IfcProcessExtension

The models in the IfcProcessExtension schema allow for the capture of information concerning the work and construction resource uses in the process required in order to create a product. The schema also contains classes that represent work plans, work schedules and schedule elements. Relationships of these objects are also captured.

The schedule information identifies the time that a work task or a work plan may be scheduled to take to complete.

HISTORY: existing schema from R1.5.1

16.1. Type IfcMultiplierOrDivider

16.1.1. Type Semantic Definition

History

New Enumeration in IFC Release 2.0

16.1.2. Enumeration

Multiplier
Divider

Copyright © International Alliance for Interoperability - 1996-1999

16.2. Type IfcWorkPlanPurposeEnum

16.2.1. Type Semantic Definition

History

New Enumeration in IFC Release 2.0

16.2.2. Enumeration

CostEstimating
TaskScheduling
UserDefined
NotDefined

16.3. Type IfcWorkTaskMilestoneEnum

16.3.1. Type Semantic Definition

History

New Enumeration in IFC Release 2.0

16.3.2. Enumeration

StartMilestone
FinishMilestone
ScheduledMilestone
ContractMilestone
CustomerMilestone
SupplyMilestone
ManagementMilestone
FinancialMilestone
UserDefined
NotDefined

16.4. Type IfcWorkTaskStatusEnum

16.4.1. Enumeration

Completed
Started
NotYetStarted
UserDefined
NotDefined

Copyright © International Alliance for Interoperability - 1996-1999

16.5. Class IfcRelNestsProcesses

16.5.1. Class Semantic Definition

This class represents the relationships of a process (i.e. IfcProcess) that nests other processes as sub-processes. It stipulates that the nesting and nested objects must be of type IfcProcess. IfcRelNestsProcesses is a subtype of IfcRelNests.

History

This Entity has changed after IFC Release 1.5.1, please see the Migration Guide for details

16.5.2. Attribute and Relationship Definitions

Superclasses and Subclasses

IfcRoot
  IfcRelationship
    IfcRelNests
      IfcRelNestsProcesses

Attributes and Relationships

	Attribute / Relation	Definition	Data or Rel. Type	Min.	Max.	Default
OPT	Criteria	The criteria of nesting processes.	STRING	Empty string	N/a	Empty string

Formal Propositions

WR41	Nesting object must be of type IfcProcess.
WR42	Nesting objects must be of type IfcProcess.

16.5.3. Interface Definitions

- I_RelNestsProcesses

16.5.4. Geometry Use Definitions

Instances of this class have no physical presence and therefore no geometric representation.

16.6. Class IfcRelNestsWorkScheduleElements

16.6.1. Class Semantic Definition

IfcRelNestsWorkScheduleElements class represents the nesting relationships of a work schedule element (i.e. IfcWorkScheduleElement) nesting other work schedule elements as sub-items. It stipulates that the nesting and nested items must be of type IfcWorkScheduleElement. IfcRelNestsWorkScheduleElements is a subtype of IfcRelNests.

History

New Entity in IFC Release 2.0

Copyright © International Alliance for Interoperability - 1996-1999

16.6.2. Attribute and Relationship Definitions

Superclasses and Subclasses

IfcRoot
IfcRelationship
IfcRelNests
IfcRelNestsWorkScheduleElements

Attributes and Relationships

	Attribute / Relation	Definition	Data or Rel. Type	Min.	Max.	Default
OPT	Description	Any description that would be useful to understand the nesting of the schedules.	STRING	Empty string	N/a	Empty string

Formal Propositions

WR41	Nesting object must be of type IfcWorkScheduleElement.
WR42	Nesting objects must be of type IfcWorkScheduleElement.

16.6.3. Interface Definitions

- I_RelNestsWorkScheduleElements

16.6.4. Geometry Use Definitions

Instances of this class have no physical presence and therefore no geometric representation.

16.7. Class IfcRelNestsWorkSchedules

16.7.1. Class Semantic Definition

IfcRelNestsWorkSchedule class represents the nesting relationships of a work schedule (i.e. IfcWorkSchedule) nesting other work schedules as sub-items. It stipulates that the nesting and nested objects must be of type IfcWorkSchedule. IfcRelNestsWorkSchedules is a subtype of IfcRelNests.

History

New Entity in IFC Release 2.0

16.7.2. Attribute and Relationship Definitions

Superclasses and Subclasses

IfcRoot
IfcRelationship
IfcRelNests
IfcRelNestsWorkSchedules

Attributes and Relationships

	Attribute / Relation	Definition	Data or Rel. Type	Min.	Max.	Default
OPT	Description	Any description that would be useful to understand the nesting of the schedules.	STRING	Empty string	N/a	Empty string

Copyright © International Alliance for Interoperability - 1996-1999

Formal Propositions

WR41	Nesting object must be of type IfcWorkSchedule.
WR42	Nesting objects must be of type IfcWorkSchedule.

16.7.3. Interface Definitions

- I_RelNestsWorkSchedules

16.7.4. Geometry Use Definitions

Instances of this class have no physical presence and therefore no geometric representation.

16.8. Class IfcRelUsesResource

16.8.1. Class Semantic Definition

IfcRelUsesResource represents the use of a construction resource in a process. It specifies the duration, the costs, the quantity, and the waste factor of the resource used in the process. It also specifies a value of the process productivity conversion rate in order to calculate the resource use costs. IfcRelUsesResource is a subtype of IfcRelRelationship.

History

New Entity in IFC Release 2.0

16.8.2. Attribute and Relationship Definitions

Superclasses and Subclasses

IfcRoot
  IfcRelationship
    IfcRelUsesResource

Attributes and Relationships

	Attribute / Relation	Definition	Data or Rel. Type	Min.	Max.	Default
	RelatingProcess	the process that requires the resource	IfcProcess	see type	see type	see type
	RelatedResource	the resources required by the process	IfcResource	see type	see type	see type
OPT	Duration	the time duration of the resource being used by the process	IfcTimeMeasure	see type	see type	see type
OPT	Quantity	The total quantity of resource used by the process	IfcMeasureWithUnit	see type	see type	see type
OPT	ProductivityConversion Rate	The productivity conversion rate	IfcMeasureWithUnit	see type	see type	see type
OPT	ConverterMultiplierOrDivider	Indicates whether the productivity converstion rate serves a multiplier or divider.	IfcMultiplierOrDivider	TRUE	FALSE	TRUE
	ResourceUseCosts	The costs of the use of the resource in a process.	SET [0:?] OF IfcCostElement	n/a	n/a	n/a
OPT	WasteFactor	The waste factor in percentage of the resource when used in the process.	REAL	0	n/a	0

Copyright © International Alliance for Interoperability - 1996-1999

16.8.3. Interface Definitions

- I_RelUsesResource

16.8.4. Geometry Use Definitions

Instances of this class have no physical presence and therefore no geometric representation.

16.9. Class IfcScheduleTimeControl

16.9.1. Class Semantic Definition

This class represents the time-related information about a process. It captures the different types (i.e. actual, or scheduled) of starting and ending times, duration, floating times, and so on. IfcScheduleTimeControl is a subtype of IfcControl.

History

1. Existing class in R1.5.1

2. Renamed to IfcScheduleTimeControl in R2.0

16.9.2. Attribute and Relationship Definitions

Superclasses and Subclasses

IfcRoot
  IfcObject
    IfcControl
      IfcScheduleTimeControl

Attributes and Relationships

	Attribute / Relation	Definition	Data or Rel. Type	Min.	Max.	Default
OPT	ActualStart	The date on which a work task is actually started. NOTE - The scheduled start date must be greater than or equal to the earliest start date. No constraint is applied to the actual start date with respect to the scheduled start date since a work task may be started than had originally been scheduled if circumstances allow.	IfcDateTimeSelect	See type	See type	See type
OPT	EarlyStart	The earliest date on which a work task can be started	IfcDateTimeSelect	See type	See type	See type
OPT	LateStart	The latest date on which a work task can be started	IfcDateTimeSelect	See type	See type	See type
OPT	ScheduleStart	The date on which a work task is scheduled to be started. NOTE - The scheduled start date must be greater than or equal to the earliest start date.	IfcDateTimeSelect	See type	See type	See type
OPT	ActualFinish	The date on which a work task is actually finished	IfcDateTimeSelect	See type	See type	See type
OPT	EarlyFinish	The earliest date on which a work task can be finishe	IfcDateTimeSelect	See type	See type	See type

Copyright © International Alliance for Interoperability - 1996-1999

OPT	LateFinish	The latest date on which a work task can be finished	IfcDateTimeSelect	See type	See type	See type
OPT	ScheduleFinish	The date on which a work task is scheduled to be finished. NOTE - The scheduled finish date must be greater than or equal to the earliest finish date.	IfcDateTimeSelect	See type	See type	See type
OPT	ScheduleDuration	The amount of time which is scheduled for completion of a work task. NOTE - Scheduled Duration may be calculated as the time from scheduled start date to scheduled finish date.	IfcTimeMeasure	See type	See type	See type
OPT	ActualDuration	The actual duration of the process that attaches the time control data.	IfcTimeMeasure			
OPT	RemainingTime	The amount of time remaining to complete a work task. NOTE - The time remaining in which to complete a work task may be determined both for tasks which have not yet started and those which have. Remaining time for a task not yet started has the same value as the scheduled duration. For a work task already started, remaining time is calculated as the difference between the scheduled finish and the point of analysis.	IfcTimeMeasure	See type	See type	See type
OPT	FreeFloat	The amount of time during which the start or finish of a work task may be varied without any effect on the overall programme of work	IfcTimeMeasure	See type	See type	See type
OPT	TotalFloat	The difference between the duration available to carry out a work task and the scheduled duration of the task. NOTE - Total Float time may be calculated as being the difference between the scheduled duration of a work task and the available duration from earliest start to latest finish. Float time may be either positive, zero or negative. Where it is zero or negative, the task becomes critical.	IfcTimeMeasure	See type	See type	See type
OPT	TaskStatus	Current status of the task. NOTE - A task may be not yet started, started (or partially complete) or completed. The actual value may be determined by comparison of the status time (which is the point at which analysis is undertaken) with start and finish dates as below. If StatusTime = ActualStart AND StatusTime <= ActualEnd THEN IfcTaskStatusEnum := Started. If StatusTime ActualEnd THEN IfcTaskStatusEnum := Completed	IfcWorkTaskStatusEnum	Completed	NotYetStarted	Completed
OPT	IsCritical	A flag which identifies whether a scheduled task is a critical item within the programme. NOTE - A work task becomes critical when the float time becomes zero or negative.	BOOLEAN	FALSE	TRUE	FALSE

Copyright © International Alliance for Interoperability - 1996-1999

OPT	StatusTime	The date or time at which the status of the tasks within the programme is analysed.	IfcDateTimeSelect	See type	See type	See type

16.9.3. Interface Definitions

- I_ScheduleData

16.9.4. Geometry Use Definitions

Instances of this class have no physical presence and therefore no geometric representation.

16.10. Class IfcWorkPlan

16.10.1. Class Semantic Definition

IfcWorkPlan class represents work plans in a construction or a facilities management project. A work plan contains a set of work schedules for different purposes. It also have references to all the activities (i.e. IfcWorkTask) and resources used in the work schedules. A work plan has information such as start date, finish date, total free float, and so on. IfcWorkPlan can also refer to the construction project represented by IfcProject through the IsContainedBy relationship to through IfcRelContains. IfcWorkPlan is a subtype of IfcControl.

History

New Entity in IFC Release 2.0

16.10.2. Attribute and Relationship Definitions

Superclasses and Subclasses

IfcRoot
  IfcObject
    IfcControl
      IfcWorkPlan

Attributes and Relationships

	Attribute / Relation	Definition	Data or Rel. Type	Min.	Max.	Default
	PlanID	identifier of the work plan, given by user	STRING	empty string	n/a	empty string
	PlanName	Name of the work plan, given by user	STRING	empty string	n/a	empty string
OPT	Description	General description of the work plan	STRING	empty string	n/a	empty string
OPT	PlanPurpose	Indicates the purpose of this work plan being made for.	IfcWorkPlanPurposeEnum	CostEstimating	TaskScheduling	CostEstimating
	CreationDate	The date that the plan is created	IfcDateTimeSelect	see type	see type	see type
	Creators	The authors of the work plan	SET [0:?] OF IfcActorSelect	n/a	n/a	N/a
	Tasks	The set of work tasks contained in the work plan. This is a mandatory relationship.	SET [0:?] OF IfcWorkTask	N/a	N/a	N/a
OPT	RootTask	The root work task of the task hierarchy.	IfcWorkTask	see type	see type	see type

Copyright © International Alliance for Interoperability - 1996-1999

	Schedules	The set of work task schedules contained in the work plan.	SET [0:?] OF IfcWorkSchedule	n/a	n/a	n/a
	Resources	All the types of resources used in the work plan. In the case that both this relationship and 'Project' and/or 'ProjectPlan', the user is responsible for ensuring that the instances of IfcResource referenced by the 3 relationships are consistent.	SET [0:?] OF IfcResource	N/a	N/a	N/a

Formal Propositions

WR1	The work plan can be done for a particular project. Therefore a relationship to IfcProject is forseen by the IfcRelContains objectified relationship.

16.10.3. Interface Definitions

- I_WorkPlan

16.10.4. Geometry Use Definitions

Instances of this class have no physical presence and therefore no geometric representation.

16.11. Class IfcWorkSchedule

16.11.1. Class Semantic Definition

This class represents a work task element in a work schedule (i.e. IfcWorkSchedule). It is associated with a work task (i.e. IfcWorkTask) and attaches it to time schedule information (i.e. IfcScheduleTimeControl). A work schedule element can also include other schedule elements as sub-items. IfcWorkSchduleElement is a subtype of IfcControl.

History

New Entity in IFC Release 2.0

16.11.2. Attribute and Relationship Definitions

Superclasses and Subclasses

IfcRoot
  IfcObject
    IfcControl
      IfcWorkSchedule

Attributes and Relationships

	Attribute / Relation	Definition	Data or Rel. Type	Min.	Max.	Default
	WorkScheduleID	The ID of the work schedule.	STRING	empty string	n/a	empty string
	WorkScheduleName	The name of the work schedule.	STRING	empty string	n/a	empty string
OPT	Description	A description of the work schedule	STRING	empty string	n/a	empty string

Copyright © International Alliance for Interoperability - 1996-1999

OPT	WorkSchedulePurpose	A description of the purpose of the work schedule	STRING	empty string	n/a	empty string
	CreationDate	The date that the schedule is created	IfcDateTimeSelect	see type	see type	see type
	Schedulers	The people who create the schedule	SET [0:?] OF IfcActorSelect	n/a	n/a	n/a
	ScheduleElements	A set of work schedule elemtns included in the schedule.	SET [1:?] OF IfcWorkScheduleElement	n/a	n/a	n/a
	TotalElements	The total number of schedule elements.	INTEGER	0	n/a	0
	Resources	References to all the resources used by the work tasks in the schedule	SET [0:?] OF IfcResource	see type	see type	see type
OPT	BaseSchedule	The reference to the base schedule	IfcWorkSchedule	see type	see type	see type
	StartTime	The start time of the schedule	IfcDateTimeSelect	see type	see type	see type
OPT	FinishTime	The finish time of the schedule	IfcDateTimeSelect	see type	see type	see type
OPT	Duration	The total duration of the entire work schedule	IfcTimeMeasure	see type	see type	see type
OPT	TotalFloat	The total time float of the entire work schedule	IfcTimeMeasure	see type	see type	see type
INV	WorkPlan	The work plan that the work schedule belongs to.	IfcWorkPlan	see type	see type	see type

Formal Propositions

WR41	Restrict the relationship 'Nests' inherited from IfcObject to IfcRelNestsWorkSchedules.
WR42	Restrict the relationship 'IsNestedBy' inherited from IfcObject to IfcRelNestsWorkSchedules.
WR3	The work schedule can be done for a particular project. Therefore a relationship to IfcProject is forseen by the IfcRelContains objectified relationship.

16.11.3. Interface Definitions

- I_WorkSchedule

16.11.4. Geometry Use Definitions

Instances of this class have no physical presence and therefore no geometric representation.

16.12. Class IfcWorkScheduleElement

16.12.1. Class Semantic Definition

This class represents a work task element in a work schedule (i.e. IfcWorkSchedule). It is associated with a work task (i.e. IfcWorkTask) and attaches it to time schedule information (i.e. IfcScheduleTimeControl). A work schedule element can also include other schedule elements as sub-items. IfcWorkSchduleElement is a subtype of IfcControl.

History

New Entity in IFC Release 2.0

16.12.2. Attribute and Relationship Definitions

Superclasses and Subclasses

IfcRoot
  IfcObject

Copyright © International Alliance for Interoperability - 1996-1999

IfcControl
IfcWorkScheduleElement

Attributes and Relationships

	Attribute / Relation	Definition	Data or Rel. Type	Min.	Max.	Default
	WorkTask	The work task that the schedule element asigned to.	IfcWorkTask	See type	See type	See type
	TimeForSchedule	Contained object for the time related information for the work schedule element	IfcScheduleTimeControl	See type	See type	See type
OPT	Milestone	The milestone of the work schedule element in the work schedule.	IfcWorkTaskMilestoneEnum	StartMile stone	NotDefin ed	StartMile stone
INV	WorkSchedule	The work schedule that the element belongs to.	IfcWorkSchedule	see type	see type	see type

Formal Propositions

WR41	
WR42	

16.12.3. Interface Definitions

- I_WorkScheduleElement

16.12.4. Geometry Use Definitions

Instances of this class have no physical presence and therefore no geometric representation.

16.13. Class IfcWorkTask

16.13.1. Class Semantic Definition

An identifiable unit of work to be carried out independently of any other units of work in a construction project. Work is identified as work tasks (i.e. IfcWorkTask) that are capable of either containing other work tasks or being sub-items of other work tasks.

A work task can be used to describe a process for the construction or installation of products and is given a name that is indicative of its content. EXAMPLE: The installation of a number of items of equipment within a particular space may be the subject of a single work task which is identified as ‘fix equipment in space 123’.

IfcWorkTask represents the occurrence of a work performance of a type of process in a construction plan, while work task types themselves are not handled in this version. Each work can nest other work tasks as sub-items; the nesting relationship is modeled by IfcRelNestsProcesses. For example, the construction of a stud wall may be designated as a nesting work task named ‘install wall #1’ including other work tasks such as ‘install dry wall’, ‘install studs’, ‘wall taping’, and ‘erect wall’ as sub-processes. Additionally, the sequential relationships between work tasks are represented by IfcRelSequence in IfcKernel schema. Resource uses of work tasks are represented by IfcRelUsesResources. IfcWorkTask is a subtype of IfcProcess.

History

This Entity has changed after IFC Release 1.5.1, please see the Migration Guide for details

Copyright © International Alliance for Interoperability - 1996-1999

16.13.2. Attribute and Relationship Definitions

Superclasses and Subclasses

IfcRoot
IfcObject
IfcProcess
IfcWorkTask

Attributes and Relationships

	Attribute / Relation	Definition	Data or Rel. Type	Min.	Max.	Default
	WorkTaskID	An identifying designation given to a task.	STRING	Empty string	N/a	Emptye string
	WorkTaskName	The name of the work task.	STRING	Empty string	N/a	Emptye string
	WBSCode	The codes of the work breakdown structure implied to the type of the work task.	LIST [0:?] OF STRING	n/a	n/a	N/a
	WBSSource	The sources of the WBSs. The items in the list should be aligned to that of the WBSs	LIST [0:?] OF STRING	n/a	n/a	N/a
	Status	Current status of the task. NOTE - A task may be not yet started, started (or partially complete) or completed. The actual value may be determined by comparison of the status time (which is the point at which analysis is undertaken) with start and finish dates as below. If StatusTime = ActualStart AND StatusTime <= ActualEnd THEN IfcTaskStatusEnum := Started. If StatusTime ActualEnd THEN IfcTaskStatusEnum := Completed	IfcWorkTaskStatusEnum	Completed	NotYetStarted	Completed
	Milestones	Indicates the milestones that this work task serves. One work task could be a milestone of different purposes in different plans.	SET [0:?] OF IfcWorkTaskMilestoneEnum	n/a	n/a	n/a
OPT	WorkMethod	The method of work used in carrying out a task.	STRING	Empty string	N/a	Emptye string
OPT	InPlaceQuantity	The quantity that has been put in place by this work task.	IfcMeasureWithUnit	see type	see type	see type
OPT	EstimatedOuantity	The estimated quantity that this work task is originally planned to complete.	IfcMeasureWithUnit	see type	see type	see type
OPT	BudgetQuantity	The budget quantity that this work task is planned to complete based on actual resource available.	IfcMeasureWithUnit	see type	see type	see type
INV	ScheduleElements	The work schedule elements that associates with this work tasks.	SET [0:?] OF IfcWorkScheduleElement	n/a	n/a	N/a
INV	WorkPlans	The reference to the work plan that contains the task	SET [0:?] OF IfcWorkPlan	n/a	n/a	N/a

Formal Propositions

WR41	Restrict the relationship 'Nests' inherited from IfcObject to IfcRelNestsProcesses.
WR42	Restrict the relationship 'IsNestedBy' inherited from IfcObject to IfcRelNestsProcesses.

Copyright © International Alliance for Interoperability - 1996-1999

16.13.3. Interface Definitions

- I_WorkTask

16.13.4. Geometry Use Definitions

Instances of this class have no physical presence and therefore no geometric representation.

17. IfcProductExtension

Core extensions, as the name implies, provide extensions to concepts rooted in the kernel. Core extensions are therefore the first refinement layer for abstract kernel constructs. Each core extension is a specialization of classes defined in the Kernel.

The IfcProductExtension schema at the core extension layer defines basic object concepts, used within the AEC/FM industry, basically Elements, Spaces, and a structuring hierarchy, which consists of Site, Building, and Building Storey. It also handles basic element connectivity and space boundaries.

17.1. Type IfcConnectionEnum

17.1.1. Type Semantic Definition

Definition from IAI: This enumeration defines the different types of connection relationships between elements according to their path definition.

ISSUE See Issue 112 for changes made in IFC Release 1.5.

17.1.2. Enumeration

AtPath	Connection point is located at path of the element.
Start	Starting point of element's path is located at the Connection
AtEnd	End point of element's path is located at the Connection
NotDefined	The location of the connection point is not known.

17.2. Type IfcElectricCurrentEnum

17.2.1. Type Semantic Definition

Definition from IAI: This enumeration defines the different types of available electrical current.

History

New Enumeration in IFC Release 2.0

17.2.2. Enumeration

Alternating
Direct
UserDefined
NotDefined

Copyright © International Alliance for Interoperability - 1996-1999

17.3. Type IfcInternalOrExternalEnum

17.3.1. Type Semantic Definition

Definition from IAI: This enumeration defines the different types of spaces or space boundaries in terms of either being inside the building (Internal) or being in / facing to the outer space (External).

History

New Enumeration in IFC Release 2.0

17.3.2. Enumeration

Internal
External
NotDefined

17.4. Type IfcPhysicalOrVirtualEnum

17.4.1. Type Semantic Definition

Definition from IAI: This enumeration defines the different types of space boundaries in terms of its physical manifestation. A space boundary can either be physically dividing (Physical) or can be a virtual divider (Virtual).

History

New Enumeration in IFC Release 2.0

17.4.2. Enumeration

Physical
Virtual
NotDefined

17.5. Class IfcBuilding

17.5.1. Class Semantic Definition

Definition from IAI: Building represents a structure that provides shelter for its occupants or contents and stands in one place. The Building is also used to provide a basic structuring hierarchy for the components of a building construction project (together with Site, Storey, and Space).

Buildings can be grouped into a building complex by virtue of the general grouping mechanism (IfcRelGroups). The Building Complex is now handled by a direct instantiation of IfcGroup with the GroupPurpose attribute = 'BuildingComplex'.

Building Sections shall be handled by the IfcZone, which may be composed of all spaces that belong to the section. The heated space within a Building shall be handled by the IfcZone, including the property for overall height of the heated space in the Building. The following figure shall define the interpretation of building heights and elevations for IfcBuilding.

Copyright © International Alliance for Interoperability - 1996-1999

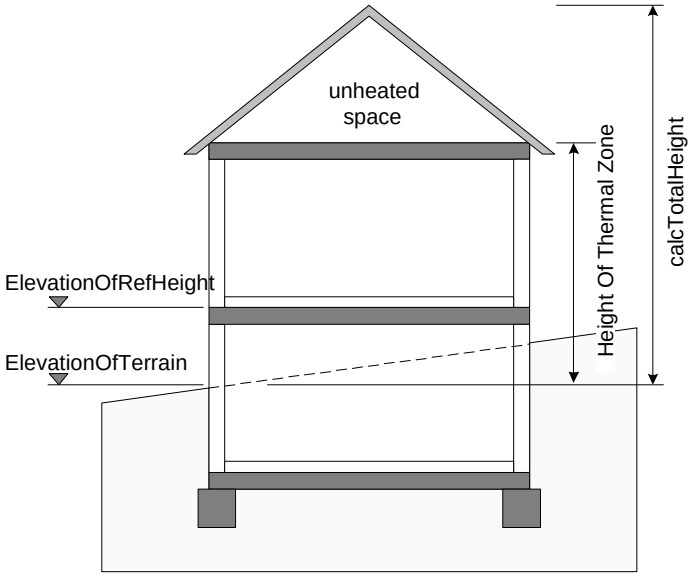

ISSUE See Issue I-108, I-122, I-116 for changes made in IFC Release 1.5.
See Issue GI-012 for changes made in IFC Release 1.5.1.

History

This Entity has changed after IFC Release 1.5.1, please see the Migration Guide for details

17.5.2. Attribute and Relationship Definitions

Superclasses and Subclasses

IfcRoot
IfcObject
IfcProduct
IfcBuilding

Attributes and Relationships

	Attribute / Relation	Definition	Data or Rel. Type	Min.	Max.	Default
OPT	BuildingReference	Short name for the building as used for reference purposes.	STRING	see type	see type	NIL
OPT	BuildingName	Long name for the building.	STRING	see type	see type	NIL
OPT	calcTotalHeight	Calculated Total (physical) Height of the Building. Exposed as an attribute by file-based exchange.	IfcLengthMeasure	0	see type	NIL
OPT	calcSiteCoverage	Calculated Coverage of the Building Site Area that is occupied by the Building (Footprint). Exposed as an attribute by file-based exchange.	IfcAreaMeasure	0	see type	NIL
OPT	calcTotalVolume	Calculated Total (Gross) Volume of all spaces enclosed by the Building. Exposed as an attribute by file-based exchange.	IfcVolumeMeasure	0	see type	NIL
OPT	ElevationOfRefHeight	Elevation above sea level of the reference height used for all storey elevation measures, equals to height 0.0. It is usually the ground floor level.	IfcLengthMeasure	see type	see type	NIL

Copyright © International Alliance for Interoperability - 1996-1999

OPT	ElevationOfTerrain	Elevation above the minimal terrain level around the foot print of the building, given in elevation above sea level.	IfcLengthMeasure	see type	see type	NIL
INV	ServicedBySystems	Set of relationships to Systems, that provides a certain service to the Building. The relationship is handled by the objectified relationship IfcRelServicesBuildings	SET [0:?] OF IfcRelServicesBuildings	n/a	n/a	NIL

Formal Propositions

WR41	There shall be exactly one instance of the IfcRelContains objectified relationship that defines a Project Container, i.e. referencing an IfcProject to contain this instance of IfcBuilding.
WR42	There shall be zero or one instance of the IfcRelContains objectified relationship that defines a Site Container, i.e. referencing an IfcSite to contain this instance of IfcBuilding.

Informal Propositions

IP41	Products being contained by IfcBuilding using the IfcRelContains objectified relationship shall be Building Storeys, Spaces or Elements.

17.5.3. Interface Definitions

- I_Building

17.5.4. Geometry Use Definitions

Object Geometry in Context

The geometric representation of IfcBuilding is given by the IfcProductShape and IfcLocalPlacement, allowing multiple geometric representation. Included are:

Local Placement

The local placement for IfcBuilding is defined in its supertype IfcProduct. It is defined by the

- IfcLocalPlacement, which defines the local coordinate system that is referenced by all geometric representations. The PlacementRelTo relationship of IfcLocalPlacement shall point to the IfcSite, if the containing site is defined for this building and if relative placement is used for this Building.

Standard Geometric Representation

The standard geometric representation (if the building has an independent geometric representation) of IfcBuilding is defined using **explicit geometry**. The faceted B-Rep capabilities (with or without voids) shall be supported for standard representation. Since the building shape is usually described by the exterior building elements, an independent shape representation shall only be given, if the Building is exposed independently from its constituting Elements.

Currently, the usage of attribute driven geometry for IfcBuilding is not supported.

Advanced Geometric Representation

The advanced geometric representation (if the building has an independent geometric representation) of IfcBuilding is defined using **explicit geometry**. The faceted B-Rep capabilities (with or without voids) shall be supported for standard representation.

Currently, the usage of attribute driven geometry for IfcBuilding is not supported.

Arbitrary Geometric Representation

The arbitrary geometric representation of IfcBuilding is defined using **explicit geometry**. The faceted B-Rep capabilities (with or without voids) shall be supported for arbitrary representation.

Copyright © International Alliance for Interoperability - 1996-1999

Currently, there is no difference in the usage of standard, advanced or arbitrary geometric representations for IfcBuilding.

17.6. Class IfcBuildingElement

17.6.1. Class Semantic Definition

Definition from IAI: The Building Element comprises all elements that are primarily part of the construction of a building, i.e., its structural and space separating system. Examples of Building Elements are walls, beams, or doors, they are all physically existent and tangible things. They are separated from other elements, since they are dealt with in separate AEC processes.

The IfcBuildingElement has an optional relationship to the IfcMaterialSelect, the select of Material definition types, either IfcMaterialComposite or IfcMaterialLayerSet. Where the IfcMaterialComposite just defines a list of Material used within the IfcBuildingElement, the IfcMaterialLayerSet also comprises the layout of layers (ordering and thickness). The type driven property sets, referenced by the subtypes of IfcBuildingElement, can be used to identify, which component uses what material.

ISSUE See issues I-105, I-120, I-190 for changes made in IFC Release 1.5

17.6.2. Attribute and Relationship Definitions

Superclasses and Subclasses

IfcRoot
- IfcObject
  - IfcProduct
    - IfcElement
      - **IfcBuildingElement**
        - IfcFurniture
        - IfcBeam
        - IfcBuiltIn
        - IfcColumn
        - IfcCovering
        - IfcDoor
        - IfcSlab
        - IfcWall
        - IfcWindow
        - IfcElectricalAppliance
        - IfcEquipment
        - IfcDiscreteElement
        - IfcDistributionElement
        - IfcSystemFurnitureElement
        - IfcRampFlight
        - IfcRamp
        - IfcVisualScreen
        - IfcStair
        - IfcStairFlight
        - IfcRailing
        - IfcCurtainWall
        - IfcPermeableCovering
        - IfcRoof
        - IfcDoorPanel
        - IfcWindowPanel
        - IfcDoorLining
        - IfcWindowLining

Copyright © International Alliance for Interoperability - 1996-1999

Attributes and Relationships

	Attribute / Relation	Definition	Data or Rel. Type	Min.	Max.	Default
OPT	HasMaterial	Reference to the Material Definition for that Building Element, can be either a single Material or a Material Layer Set	IfcMaterialSelect	n/a	n/a	NIL
INV	ProvidesBoundaries	Reference to Space Boundaries by virtue of the objectified relationship IfcRelSeparatesSpaces. It defines the concept of an Building Element bounding Spaces	SET [0:?] OF IfcRelSeparatesSpaces	n/a	n/a	NIL
INV	HasOpenings	Reference to the Voids Relationship that creates an opening in an element. An element can incorporate zero-to-many openings.	SET [0:?] OF IfcRelVoidsElement	n/a	n/a	NIL
INV	FillsVoids	Reference to the Fills Relationship that puts the Element into the Opening within another Element.	SET [0:?] OF IfcRelFillsElement	n/a	n/a	NIL

17.6.3. Interface Definitions

- I_BuildingElement

17.6.4. Geometry Use Definitions

There are no instances of this abstract class. However, subtypes of this class do have geometry defined.

17.7. Class IfcBuildingStorey

17.7.1. Class Semantic Definition

Definition from IAI: The Building Storey has an elevation and typically represents a (nearly) horizontal aggregation of spaces that are vertically bound. Building Sections shall be handled by the IfcZone, which may be composed of all spaces that belong to the section. This is a restriction of the IFC Release 1.5.

ISSUE See issues I-112, I-114, I-115, I-116, I-192 for changes made in IFC Release 1.5.
See Issue GI-012 for changes made in IFC Release 1.5.1.

History

This Entity has changed after IFC Release 1.5.1, please see the Migration Guide for details

17.7.2. Attribute and Relationship Definitions

Superclasses and Subclasses

IfcRoot
  IfcObject
    IfcProduct
      IfcBuildingStorey

Attributes and Relationships

	Attribute / Relation	Definition	Data or Rel. Type	Min.	Max.	Default
OPT	BuildingStoreyReferenc	Short name for the building storey as	STRING	see type	see type	n/a

Copyright © International Alliance for Interoperability - 1996-1999

	e	used for reference purposes.				
OPT	BuildingStoreyName	Long name for the building storey.	STRING	see type	see type	n/a
	Elevation	Elevation of the base of this storey, relative to the ElevationOfRefHeight attribute given at IfcBuilding.	IfcLengthMeasure	0	see type	0
OPT	calcTotalHeight	Calculated height of this storey, from the bottom surface of the floor, to the bottom surface of the floor or roof above. Will be exposed as an attribute by file-based exchange.	IfcLengthMeasure	0	see type	NIL
OPT	calcTotalArea	Calculated gross floor area for the floor plate of this storey (horizontal projections). Will be exposed as an attribute by file-based exchange.	IfcAreaMeasure	0	see type	NIL
OPT	calcTotalVolume	Calculated gross volume for this storey. Will be exposed as an attribute by file-based exchange.	IfcVolumeMeasure	0	see type	NIL

Formal Propositions

WR41	There shall be exactly one instance of the IfcRelContains objectified relationship that defines a ProjectContainer, i.e. referencing an IfcProject to contain this instance of IfcBuildingStorey.
WR42	There shall be exactly one instance of the IfcRelContains objectified relationship that defines a BuildingContainer, i.e. referencing an IfcBuilding to contain this instance of IfcBuildingStorey.

Informal Propositions

IP41	Products being contained by IfcBuildingStorey using the IfcRelContains objectified relationship shall be either Spaces or Elements.

17.7.3. Interface Definitions

- I_BuildingStorey

17.7.4. Geometry Use Definitions

Object Geometry in Context

The geometric representation of IfcBuildingStorey is given by the IfcProductShape and IfcLocalPlacement, allowing multiple geometric representation. Included are:

Local Placement

The local placement for IfcBuildingStorey is defined in its supertype IfcProduct. It is defined by the

- IfcLocalPlacement, which defines the local coordinate system that is referenced by all geometric representations. The PlacementRelTo relationship of IfcLocalPlacement shall point to the IfcBuilding, if the containing building is defined for this building storey and if relative placement is used for this building storey.

Standard Geometric Representation

The standard geometric representation (if the building storey has an independent geometric representation) of IfcBuildingStorey is defined using **explicit geometry**. The faceted B-Rep capabilities (with or without voids) shall be supported for standard representation. Since the building storey shape is usually described by the exterior building elements, an independent shape representation shall only be given, if the building storey is exposed independently from its constituting Elements.

Currently, the usage of attribute driven geometry for IfcBuildingStorey is not supported.

Copyright © International Alliance for Interoperability - 1996-1999

Advanced Geometric Representation

The advanced geometric representation (if the building storey has an independent geometric representation) of IfcBuildingStorey is defined using **explicit geometry**. The faceted B-Rep capabilities (with or without voids) shall be supported for standard representation.

Currently, the usage of attribute driven geometry for IfcBuildingStorey is not supported.

Arbitrary Geometric Representation

The arbitrary geometric representation of IfcBuildingStorey is defined using **explicit geometry**. The faceted B-Rep capabilities (with or without voids) shall be supported for arbitrary representation.

Currently, there is no difference in the usage of standard, advanced or arbitrary geometric representations for IfcBuildingStorey.

17.8. Class IfcConnectionGeometry

17.8.1. Class Semantic Definition

Definition from IAI: The IfcConnectionGeometry is used to describe the geometrical and topological constraints that facilitate the physical connection of two objects. It is envisioned as a control that applies to the IfcRelConnectsElements relationship. In the current IFC Release it is restricted to just geometrical constraints and to Point connection types only.

ISSUE See issue I-101, I-305 for changes made in IFC Release 1.5.

17.8.2. Attribute and Relationship Definitions

Superclasses and Subclasses

IfcRoot
  IfcObject
    IfcControl
      IfcConnectionGeometry
        IfcLineConnectionGeometry
        IfcPointConnectionGeometry

Attributes and Relationships

No attributes defined at this level.

17.8.3. Interface Definitions

- I_ConnectionGeometry

17.8.4. Geometry Use Definitions

This abstract control does not carry additional geometry - there is no geometry use definition.

Copyright © International Alliance for Interoperability - 1996-1999

17.9. Class IfcElectricalCharacteristics

17.9.1. Class Semantic Definition

Definition from IAI: Common definition to capture electrical characteristics for use in building services and facilities management.

History

New Entity in IFC Release 2.0

17.9.2. Attribute and Relationship Definitions

Superclasses and Subclasses

IfcRoot
  IfcPropertyDefinition
    IfcElectricalCharacteristics

Attributes and Relationships

	Attribute / Relation	Definition	Data or Rel. Type	Min.	Max.	Default
OPT	ElectricCurrentType	Type of electrical current applied	IfcElectricCurrentEnum	Alternating	NotDefined	NotDefined
OPT	InputVoltage	Input electrical potential	IfcElectricVoltageMeasure	see type	see type	NIL
OPT	InputPhase	Relative phase of input conductors	INTEGER	see type	see type	NIL
OPT	InputFrequency	Nominal frequency of input voltage wave form. It is an measur with unit, the SI unit is Hertz (s-1)	IfcFrequencyMeasure	see type	see type	NIL
OPT	FullLoadCurrent	Full load electrical current requirements	IfcElectricCurrentMeasure	see type	see type	NIL
OPT	LockedRotorCurrent	Input current when a motor armature is energized but not rotating	IfcElectricCurrentMeasure	see type	see type	NIL
OPT	InrushCurrent	The current the electrical device may be subjected to upon initial startup	IfcElectricCurrentMeasure	see type	see type	NIL
OPT	MinimumCircuitCurrent	Minimum current carrying capacity of the electrical circuit	IfcElectricCurrentMeasure	see type	see type	NIL
OPT	RatedPowerInput	Actual electrical input power of the electrical device at its rated capacity	IfcPowerMeasure	see type	see type	NIL
OPT	MaximumPowerInput	Maximum power input of the electrical device	IfcPowerMeasure	see type	see type	NIL
OPT	CircuitSizePowerInput	Electrical power input that should be used for circuit sizing	IfcPowerMeasure	see type	see type	NIL
OPT	FuseSize	Designation for fuse for this electrical device. It is a measure with unit, the SI unit is Ampere (A).	IfcElectricCurrentMeasure	see type	see type	NIL
OPT	Grounded	Does this element require electrical grounding? TRUE = Yes, FALSE = No.	BOOLEANIfcBoolean	see type	see type	NIL

17.9.3. Interface Definitions

- I_ElectricalCharacteristics

Copyright © International Alliance for Interoperability - 1996-1999

17.9.4. Geometry Use Definitions

This property definition does not carry additional geometry - there is no geometry use definition.

17.10. Class IfcElement

17.10.1. Class Semantic Definition

Definition from IAI: Generalization of all components that make up an AEC product. Those elements can be located logically by an element container in a structuring hierarchy (here: building), described by calculated quantities and assigned with one or many performed functions. The latter copes with multifunctional elements.

Elements are physically existent objects, although they might be void elements, such as holes. Elements either remain permanently in the AEC product, or only temporarily, as formwork does. Elements can be either assembled on site or pre-manufactured and built in on site. Examples of elements in a building construction context are walls, floors, windows and recesses.

An Element can also be defined as an Element Assembly that is a group of semantically and topologically related Elements that forms a higher level part of the AEC product. Examples for Element Assembly are complete Roof Structures, made by several Roof Areas, or a Stair, composed by Flights and Landings.

Elements that performs the same function may be grouped by an "Element Group By Function". It is realized by an instance of IfcGroup with the GroupPurpose = 'ElementGroupByFunction".

ISSUE See issues I-103, I-104 for changes made in IFC Release 1.5.
See issues GI-012, I-102 for changes made in IFC Release 1.5.1.

17.10.2. Attribute and Relationship Definitions

Superclasses and Subclasses

IfcRoot
- IfcObject
  - IfcProduct
    - **IfcElement**
      - IfcBuildingElement
      - IfcOpeningElement

Attributes and Relationships

	Attribute / Relation	Definition	Data or Rel. Type	Min.	Max.	Default
INV	ConnectedTo	Reference to the element connection relationship. The relationship then refers to the other element to which this element is connected to.	SET [0:?] OF IfcRelConnectsElements	n/a	n/a	NIL
INV	ConnectedFrom	Reference to the element connection relationship. The relationship then refers to the other element that is connected to this element.	SET [0:?] OF IfcRelConnectsElements	n/a	n/a	NIL
INV	IsAssemblyThrough	Reference to the assemble relationship, that creates element assemblies. It defines via the RelatingObject side this Element as the assembly of other Elements.	SET [0:1] OF IfcRelAssemblesElements	n/a	n/a	NIL
INV	PartOfAssembly	Reference to the assemble relationship, that creates element assemblies.	SET [0:1] OF IfcRelAssemblesElements	n/a	n/a	NIL

Copyright © International Alliance for Interoperability - 1996-1999

Formal Propositions

WR41	There shall be exactly one instance of the IfcRelContains objectified relationship that defines a ProjectContainer, i.e. referencing an IfcProject to contain this instance of IfcBuildingStorey.
WR42	The allowed subtypes of IfcProduct that can act as element containers are: IfcSpace, IfcSite, IfcBuilding, and IfcBuildingStorey. NOTE: This rule replaces the former SELECT type IfcElementContainer. There shall be only one instance of the IfcRelContains objectified relationship that contains (ContainedOrReferenced = TRUE) this instance of IfcElement. The relationship type shall therefore be SiteContainer, BuildingContainer, BuildingStoreyContainer, or SpaceContainer.

17.10.3. Interface Definitions

- I_Element

17.10.4. Geometry Use Definitions

There are no instances of this abstract class. However, subtypes of this class do have geometry defined.

17.11. Class IfcLineConnectionGeometry

17.11.1. Class Semantic Definition

Definition from IAI: The IfcLineConnectionGeometry is used to describe the geometrical constraints that facilitate the physical connection of two objects at a line (IfcPolyline). It is envisioned as a control that applies to the IfcRelConnectsElements relationship.

17.11.2. Attribute and Relationship Definitions

Superclasses and Subclasses

IfcRoot
  IfcObject
    IfcControl
      IfcConnectionGeometry
        IfcLineConnectionGeometry

Attributes and Relationships

	Attribute / Relation	Definition	Data or Rel. Type	Min.	Max.	Default
	LineOnRelatingElement	Line at which connected objects are aligned at the Relating Element, given in the LCS of the Relating Element.	IfcPolyline	n/a	n/a	see type
OPT	LineOnRelatedElement	Line at which connected objects are aligned at the Related Element, given in the LCS of the Related Element. If the information is omitted, than the Origin of the Related Element is used.	IfcPolyline	n/a	n/a	NIL

17.11.3. Interface Definitions

- I_LineConnectionGeometry

Copyright © International Alliance for Interoperability - 1996-1999

17.11.4. Geometry Use Definitions

The Polyline defines the line segments, where the basic geometry items of the connected Element connects.

17.12. Class IfcManufactureInformation

17.12.1. Class Semantic Definition

Definition from IAI: This class defines the characteristic for manufactured and assembled products, given by the manufacturer of the product.

History

New Entity in IFC Release 2.0

17.12.2. Attribute and Relationship Definitions

Superclasses and Subclasses

IfcRoot
  IfcPropertyDefinition
    IfcManufactureInformation

Attributes and Relationships

	Attribute / Relation	Definition	Data or Rel. Type	Min.	Max.	Default
OPT	Description	A physical description of the manufactured item	STRING	n/a	n/a	NIL
OPT	ModelLabel	The model number and/or unit designator assigned by the manufacturer of the manufactured item	STRING	n/a	n/a	NIL
OPT	ModelReference	The name of the manufactured item as used by the manufacturer	STRING	n/a	n/a	NIL
OPT	Manufacturer	The organization that manufactured and/or assembled the item	IfcOrganization	n/a	n/a	NIL
OPT	ShippingWeight	Weight of this manufactured item when packaged for shipping to or from the project site	IfcMassMeasure	n/a	n/a	NIL
OPT	OperatingWeight	Weight of this manufactured item when installed and operating at the project site	IfcMassMeasure	n/a	n/a	NIL
OPT	WarrantyDuration	Length of warranty for this manufactured item	IfcTimeMeasure	n/a	n/a	NIL
	WarrantyTerms	A listing of description of the terms of warranty by the manufacturer	LIST [0:?] OF STRING	n/a	n/a	NIL

17.12.3. Interface Definitions

- I_ManufactureInformation

17.12.4. Geometry Use Definitions

This property definition does not carry additional geometry - there is no geometry use definition.

Copyright © International Alliance for Interoperability - 1996-1999

17.13. Class IfcOpeningElement

17.13.1. Class Semantic Definition

Definition from IAI: Opening Element stands for opening, recess or chase, all reflecting voids. It represents a void within any element that has physical manifestation. Openings must be handled by all sectors and disciplines in AEC/FM industry, therefore the interoperability for Opening Elements is provided at this high level.

ISSUE See Issue GI-012 for changes made in IFC Release 1.5.1.

History

This Entity has changed after IFC Release 1.5.1, please see the Migration Guide for details

17.13.2. Attribute and Relationship Definitions

Superclasses and Subclasses

IfcRoot
IfcObject
IfcProduct
IfcElement
IfcOpeningElement

Attributes and Relationships

	Attribute / Relation	Definition	Data or Rel. Type	Min.	Max.	Default
OPT	calcOpeningArea	Total Gross (physical) Area of the opening area (front view). Exposed as an attribute by file-based exchange, particularly for receiving applications with limited (or not existing) geometric capabilities.	IfcAreaMeasure	0	see type	NIL
INV	VoidsElements	Reference to the Voids Relationship that uses this Opening Element to create a void within an Element. The Opening Element can only be used to create a single void within a single Element.	IfcRelVoidsElement	n/a	n/a	NIL
INV	HasFillings	Reference to the Filling Relationship that is used to assign Elements as Fillings for this Opening Element. The Opening Element can be filled with zero-to-many Elements.	SET [0:?] OF IfcRelFillsElement	n/a	n/a	NIL

17.13.3. Interface Definitions

- I_OpeningElement

17.13.4. Geometry Use Definitions

Object Geometry in Context

The geometric representation of IfcOpeningElement is given by the IfcProductShape and IfcLocalPlacement allowing multiple geometric representations. Included are:

Copyright © International Alliance for Interoperability - 1996-1999

Local Placement

The Reference Geometry for IfcOpeningElement is defined in its supertype IfcProduct. It is defined by the

- IfcLocalPlacement, which defines the local coordinate system that is referenced by all geometric representations.

Standard Geometric Representation

The standard geometric representation of IfcOpeningElement is defined using the **attribute driven geometry**. The following constraints apply to the standard representation:

- *Solid*: IfcAttDrivenExtrudedSolid is required, referring to a single segment.
- *Segment*: IfcAttDrivenExtrudedSegment is required.
- *Profile*: IfcRectangleProfileDef shall be supported.
- *Extrusion*: The profile shall be extruded horizontally, e.g. for wall openings, or vertically e.g., for floor openings.

Example for standard geometric representation:

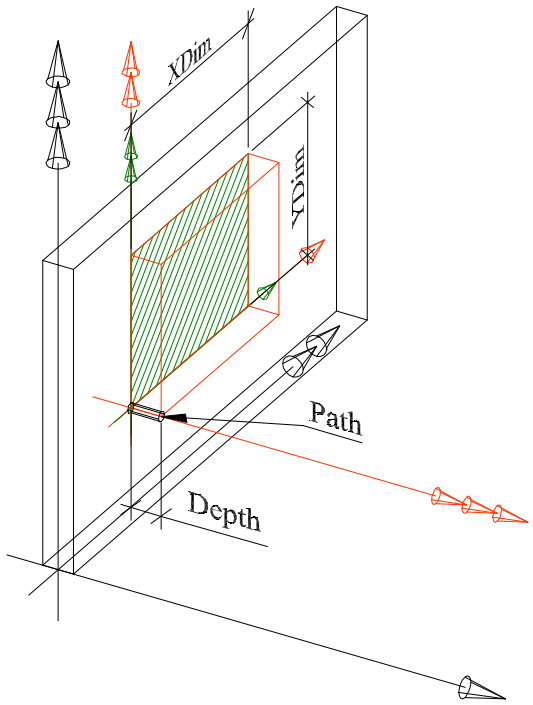

Extrusion

Extrusion path, for standard representation given by IfcAttDrivenExtrudedSolid referencing a single IfcAttDrivenExtrudedSegment
Default Type: **IfcAttDrivenExtrudedSegment**

- IfcAttDrivenExtrudedSegment.Depth, Extrusion path defined by a positive length measure along the local z-axis

Profile

Extrusion profile, for standard representation given by IfcAttDrivenExtrudedSegment referencing IfcAttDrivenProfileDef
Default Type: **IfcRectangleProfileDef**

- YDim interpreted as Opening Height, XDim interpreted as Opening Width.

Extrusion Direction

The opening profile is extruded horizontally, i.e. in the direction of the thickness of the penetrated wall.

Placement

[Black arrows] The local placement of opening is placed relative to the co-ordinate system of the building element which is voided by the opening.
[Red arrows] The segment is placed relative to the local placement.
[Green arrows] The profile is placed relative to the XY plane of the placement co-ordinate system of the segment.

Advanced Geometric Representation

The advanced geometric representation of IfcOpeningElement is defined using the **attribute driven geometry**. The following constraints apply to the advanced representation:

- *Solid*: IfcAttDrivenExtrudedSolid is required, referring to a single or multiple segments.
- *Segment*: IfcAttDrivenExtrudedSegment is required.
- *Profile*: IfcRectangleProfileDef, IfcCircleProfileDef and IfcArbitraryProfileDef shall be supported.
- *Extrusion*: All extrusion directions shall be supported. This would provide support of openings in sloped building elements.

Example for advanced geometric representation:

Copyright © International Alliance for Interoperability - 1996-1999

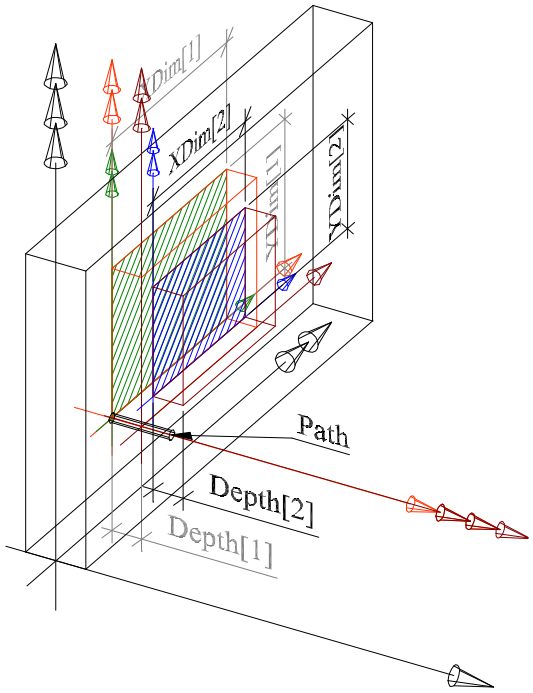

Extrusion

Extrusion path, for standard representation given by IfcAttDrivenExtrudedSolid referencing multiple (here two) IfcAttDrivenExtrudedSegment. Hereby openings with shaped reveals are supported.
Default Type: Set of **IfcAttDrivenExtrudedSegment**

- IfcAttDrivenExtrudedSegment[1..n].Depth, Extrusion paths defined by a positive length measure along the local z-axis.

Profile

Extrusion profile, for standard representation given by each IfcAttDrivenExtrudedSegment referencing IfcAttDrivenProfileDef
Default Type: **IfcRectangleProfileDef**

- YDim interpreted as Opening Height, XDim interpreted as Opening Width.

Other Type: **IfcCircleProfileDef**

- Radius interpreted as the Opening radius.

Other Type: **IfcArbitraryProfileDef**

- IfcBoundedCurve (closed and 2D) defining an arbitrary opening shape.

Extrusion Direction

The opening profile is extruded in the direction of the thickness of the penetrated sloped roof slab, i.e. an arbitrary extrusion direction.

Placement

[Black arrows] The local placement of opening is placed relative to the co-ordinate system of the building element which is voided by the opening.
[Red and brown arrows] The segments are placed relative to the local placement.
[Green and blue arrows] The profiles are placed relative to the XY planes of the placement co-ordinate systems of the segments.

Arbitrary Geometric Representation

The arbitrary geometric representation of IfcOpeningElement is defined using **explicit geometry**. The faceted B-Rep capabilities (with or without voids) shall be supported for arbitrary representation.

17.14. Class IfcPointConnectionGeometry

17.14.1. Class Semantic Definition

Definition from IAI: The IfcPointConnectionGeometry is used to describe the geometrical constraints that facilitate the physical connection of two objects at a point (IfcCartesianPoint). It is envisioned as a control that applies to the IfcRelConnectsElements relationship.

ISSUE See issue I-101, I-305 for changes made in IFC Release 1.5.

17.14.2. Attribute and Relationship Definitions

Superclasses and Subclasses

IfcRoot
  IfcObject
    IfcControl
      IfcConnectionGeometry
        IfcPointConnectionGeometry

Attributes and Relationships

	Attribute / Relation	Definition	Data or Rel. Type	Min.	Max.	Default
	PointOnRelatingElement	Point at which connected objects are	IfcCartesianPoint	n/a	n/a	see type

Copyright © International Alliance for Interoperability - 1996-1999

		aligned at the Relating Element, given in the LCS of the Relating Element.				
OPT	PointOnRelatedElement	Point at which connected objects are aligned at the Related Element, given in the LCS of the Related Element. If the information is omitted, than the Origin of the Related Element is used.	IfcCartesianPoint	n/a	n/a	NIL

17.14.3. Interface Definitions

- I_PointConnectionGeometry

17.14.4. Geometry Use Definitions

The Cartesian Point defines the point, where the basic geometry items of the connected Element connects.

17.15. Class IfcRelAssemblesElements

17.15.1. Class Semantic Definition

Definition from IAI: Objectified Relationship that assembles various Elements (or other Element Assemblies) into an Element Assembly. The Elements shall have a strong semantic and topological relationship and shall make up a new component within the AEC product.

ISSUE See issue I-106 for changes made in IFC Release 1.5.
See Issue GI-012 for changes made in IFC Release 1.5.1.

17.15.2. Attribute and Relationship Definitions

Superclasses and Subclasses

IfcRoot
IfcRelationship
IfcRelAssemblesElements

Attributes and Relationships

	Attribute / Relation	Definition	Data or Rel. Type	Min.	Max.	Default
	RelatingElement	Element that is defined as Assembly by virtue of this relationship.	IfcElement	n/a	n/a	NIL
	RelatedElements	Elements being part of the assembly.	LIST [1:?] OF IfcElement	n/a	n/a	NIL

Formal Propositions

WR31	The instance to which the relation points shall not be contained in the List of RelatedObjects.

Informal Propositions

IP31	The IfcRelAssemblesElements relationship shall be defined acyclic.

17.15.3. Interface Definitions

- I_RelAssemblesElements

Copyright © International Alliance for Interoperability - 1996-1999

17.15.4. Geometry Use Definitions

This objectified relationship does not carry additional geometry - there is no geometry use definition.

17.16. Class IfcRelAssemblesSpaces

17.16.1. Class Semantic Definition

Definition from IAI: Objectified Relationship that assembles various partial Spaces (or other Space Assemblies) into a Space Assembly. The Spaces shall have a strong semantic and topological relationship and shall make up a new Space with well defined boundaries. For non topological related Space groups use IfcZone.

ISSUE See issue I-106 for changes made in IFC Release 1.5.
See Issue I-310 for changes made in IFC Release 1.5.1.

17.16.2. Attribute and Relationship Definitions

Superclasses and Subclasses

IfcRoot
IfcRelationship
IfcRelAssemblesSpaces

Attributes and Relationships

	Attribute / Relation	Definition	Data or Rel. Type	Min.	Max.	Default
	RelatingSpace	Space that is defined as Assembly by virtue of this relationship.	IfcSpace	n/a	n/a	n/a
	RelatedSpaces	Spaces being part of the assembly.	LIST [1:?] OF IfcSpace	1	N	n/a

Formal Propositions

WR31	The instance to with the relation points shall not be contained in the List of RelatedObjects.

Informal Propositions

IP31	The IfcRelAssemblesElements relationship shall be defined acyclic.

17.16.3. Interface Definitions

- I_RelAssemblesSpaces

17.16.4. Geometry Use Definitions

This objectified relationship does not carry additional geometry - there is no geometry use definition.

17.17. Class IfcRelConnectsElements

17.17.1. Class Semantic Definition

Definition from IAI: Generalization of the connectivity between Elements. Based on this special type of 1 to 1 relationship, the concept of two elements being physically or logically connected is described independently from the connecting elements.

Copyright © International Alliance for Interoperability - 1996-1999

Currently the connectivity is related to geometric entities on which the connection of the underlying basic geometry of the connecting elements occurs. This will be enhanced and/or replaced in later versions of the IFC model by a proper topological model. The geometrical constraints of the connection are provided by the optional relationship to the IfcConnectionGeometry control. If it is omitted then the connection is provided as a logical connection. Under this circumstance, the connection point, curve or surface has to be recalculated by the receiving application.

ISSUE See issue I-189, I-304 for changes made in IFC Release 1.5.
See Issue I-310 for changes made in IFC Release 1.5.1.

17.17.2. Attribute and Relationship Definitions

Superclasses and Subclasses

IfcRoot
IfcRelationship
IfcRelConnectsElements
IfcRelConnectsPathElements
IfcRelJoinsElements

Attributes and Relationships

	Attribute / Relation	Definition	Data or Rel. Type	Min.	Max.	Default
OPT	ConnectionGeometry	Relationship to the control class, that provides the geometrical constraints of the connection.	IfcConnectionGeometry	n/a	n/a	NIL
	RelatingElement	Reference to an Element that is connected by the objectified relationship.	IfcElement	n/a	n/a	see type
	RelatedElement	Reference to an Element that is connected by the objectified relationship.	IfcElement	n/a	n/a	see type

Formal Propositions

WR31	The instance of the relating element shall not be the same instance as the related element.

17.17.3. Interface Definitions

- I_RelConnectsElements

17.17.4. Geometry Use Definitions

No geometric information about the connection is defined at the supertype.

17.18. Class IfcRelConnectsPathElements

17.18.1. Class Semantic Definition

Definition from IAI: The IfcRelConnectsPathElements provides the connectivity information between two Elements. The objectified relationship provides all additional information requirements to describe the connection between two path based elements that might have single or multiple layers of material.

ISSUE See issue I-189, I-304 for changes made in IFC Release 1.5

Copyright © International Alliance for Interoperability - 1996-1999

History

This Entity has changed after IFC Release 1.5.1, please see the Migration Guide for details

17.18.2. Attribute and Relationship Definitions

Superclasses and Subclasses

IfcRoot
IfcRelationship
IfcRelConnectsElements
IfcRelConnectsPathElements

Attributes and Relationships

	Attribute / Relation	Definition	Data or Rel. Type	Min.	Max.	Default
	RelatingPriorities	Priorities for connection. It refers to the layers of the RelatingObject.	LIST [0:RelatingLayerCount] OF INTEGER	0	Relating Layer Count	0
	RelatedPriorities	Priorities for connection. It refers to the layers of the RelatedObject	LIST [0:RelatedLayerCount] OF INTEGER	0	Related Layer Count	0
	RelatingConnectionType	Indication of the connection type in relation to the path of the RelatingObject.	IfcConnectionEnum	AtPath	NotKnow n	AtEnd
	RelatedConnectionType	Indication of the connection type in relation to the path of the RelatingObject.	IfcConnectionEnum	AtPath	NotKnow n	Start
	RelatingLayerCount	No of layers of the RelatingObject	INTEGER	1	see type	1
	RelatedLayerCount	No of layers of the RelatedObject	INTEGER	1	see type	1

17.18.3. Interface Definitions

- I_RelConnectsPathElements

17.18.4. Geometry Use Definitions

No geometric information about the connection is defined at the supertype.

17.19. Class IfcRelFillsElement

17.19.1. Class Semantic Definition

Definition from IAI: Objectified relationship between an opening element and building elements that fill (or partially fill) the opening element.

ISSUE See Issue I-310 for changes made in IFC Release 1.5.1.

17.19.2. Attribute and Relationship Definitions

Superclasses and Subclasses

IfcRoot
IfcRelationship

Copyright © International Alliance for Interoperability - 1996-1999

IfcRelFillsElement

Attributes and Relationships

	Attribute / Relation	Definition	Data or Rel. Type	Min.	Max.	Default
	RelatingOpeningElement	Opening Element being filled by virtue of this relationship	IfcOpeningElement	n/a	n/a	see type
	RelatedBuildingElement	Element that occupy fully or partially the associated opening	IfcBuildingElement	n/a	n/a	see type

17.19.3. Interface Definitions

- I_RelFillsElement

17.19.4. Geometry Use Definitions

This objectified relationship does not carry additional geometry - there is no geometry use definition.

17.20. Class IfcRelSeparatesSpaces

17.20.1. Class Semantic Definition

Definition from IAI: Objectified relationship that handles the Element to Space relationship by objectifying the relationship between an Element and a Space Boundary.

ISSUE See issue I-120 for changes made in IFC Release 1.5.
See Issue I-310 for changes made in IFC Release 1.5.1.

17.20.2. Attribute and Relationship Definitions

Superclasses and Subclasses

IfcRoot
IfcRelationship
IfcRelSeparatesSpaces

Attributes and Relationships

	Attribute / Relation	Definition	Data or Rel. Type	Min.	Max.	Default
	RelatingBuildingElement	Reference to Building Element, that defines the Space Boundaries	IfcBuildingElement	n/a	n/a	NIL
	RelatedSpaceBoundaries	Reference to a set of Space Boundaries that are defined by the relating Element.	LIST [1:?] OF IfcSpaceBoundary	n/a	n/a	NIL

17.20.3. Interface Definitions

- I_RelSeparatesSpaces

17.20.4. Geometry Use Definitions

This objectified relationship does not carry additional geometry - there is no geometry use definition.

Copyright © International Alliance for Interoperability - 1996-1999

17.21. Class IfcRelServicesBuildings

17.21.1. Class Semantic Definition

Definition from IAI: Objectified Relationship that defines the relationship between a System and the Buildings it serves.

ISSUE See issues I-089, I-111 for changes made in IFC Release 1.5.
See Issue I-310 for changes made in IFC Release 1.5.1.

17.21.2. Attribute and Relationship Definitions

Superclasses and Subclasses

IfcRoot
IfcRelationship
IfcRelServicesBuildings

Attributes and Relationships

	Attribute / Relation	Definition	Data or Rel. Type	Min.	Max.	Default
	RelatingSystem	System that services the Buildings.	IfcSystem	n/a	n/a	see type
	RelatedBuildings	Buildings that are serviced by the System	LIST [1:?] OF IfcBuilding	n/a	n/a	see type

17.21.3. Interface Definitions

- I_RelServicesBuildings

17.21.4. Geometry Use Definitions

This objectified relationship does not carry additional geometry - there is no geometry use definition.

17.22. Class IfcRelVoidsElement

17.22.1. Class Semantic Definition

Definition from IAI: Objectified Relationship between an building element and one opening element that creates a void in the element. This relationship implies a Boolean Operation of subtraction for the geometric bodies of Element and Opening Element.

ISSUE See Issue I-310 for changes made in IFC Release 1.5.1.

17.22.2. Attribute and Relationship Definitions

Superclasses and Subclasses

IfcRoot
IfcRelationship
IfcRelVoidsElement

Copyright © International Alliance for Interoperability - 1996-1999

Attributes and Relationships

	Attribute / Relation	Definition	Data or Rel. Type	Min.	Max.	Default
	RelatingBuildingElement	Element in which a void is created by associated Opening Elements	IfcBuildingElement	n/a	n/a	see type
	RelatedOpeningElement	Opening Elements which define voids in the associated Element	IfcOpeningElement	n/a	n/a	see type

17.22.3. Interface Definitions

- I_RelVoidsElement

17.22.4. Geometry Use Definitions

This objectified relationship does not carry additional geometry - there is no geometry use definition.

17.23. Class IfcSite

17.23.1. Class Semantic Definition

Definition from IAI: A defined area of land, possibly covered with water, on which the project construction is to be completed. A site may be used to erect Building(s) or other AEC products.

Site may include a definition of the single geographic reference point for this site (global position using Longitude, Latitude and Elevation) for the project. This definition is given for informational purposes only; it is not intended to provide an absolute placement in relation to the world. The geometrical placement of the Site, defined by the IfcLocalPlacement is always relative to the Project if the PlacementRelTo attribute is specified.

A project may span over several connected or disconnected sites. Therefore Site Complex provides for a collection of Sites included in a project. The Site Complex is handled by an IfcGroup having a Group Purpose of 'SiteComplex'.

ISSUE See issues I-125, I-194 for changes made in IFC Release 1.5.

History

This Entity has changed after IFC Release 1.5.1, please see the Migration Guide for details

17.23.2. Attribute and Relationship Definitions

Superclasses and Subclasses

IfcRoot
  IfcObject
    IfcProduct
      IfcSite

Attributes and Relationships

	Attribute / Relation	Definition	Data or Rel. Type	Min.	Max.	Default
OPT	RefLatitude	World Latitude at Reference point (most likely defined in legal description). Defined as Real values for Degrees, minutes, seconds.	IfcCompoundPlaneAngleMea sure	0	see type	0
OPT	RefLongitude	World Longitude at Reference point	IfcCompoundPlaneAngleMea	0	see type	0

Copyright © International Alliance for Interoperability - 1996-1999

		(most likely defined in legal description). Defined as Real values for Degrees, minutes, seconds.	sure			
OPT	RefElevation	Datum elevation relative to sea level	IfcLengthMeasure	0	see type	0
OPT	TrueNorth	Direction of the true north for the site, given within the local co-ordinate system of site, as specified by the local placement.	IfcDirection	see type	see type	n/a
OPT	calcSitePerimeter	Perimeter of the Site boundary. Exposed as attribute in file-based exchange.	IfcPositiveLengthMeasure	0	see type	0
OPT	calcSiteArea	Gross area for this site (horizontal projections). Exposed as attribute in file-based exchange.	IfcAreaMeasure	0	see type	0

Formal Propositions

WR41	There shall be exactly one instance of the IfcRelContains objectified relationship that defines a ProjectContainer, i.e. referencing an IfcProject to contain this instance of IfcSite.

Informal Propositions

IP41	Products being contained by IfcSite using the IfcRelContains objectified relationship shall be either Buildings, Building Storeys, Spaces or Elements.

17.23.3. Interface Definitions

- I_Site

17.23.4. Geometry Use Definitions

The geometric representation of IfcSite is given by the IfcProductShape and IfcLocalPlacement allowing multiple geometric representations. Included are:

Local Placement

The local placement for IfcSite is defined in its supertype IfcProduct. It is defined by the

- IfcLocalPlacement, which defines the local coordinate system that is referenced by all geometric representations. The PlacementRelTo relationship of IfcLocalPlacement shall point to the IfcProject, if relative placement is used for this Building.

Standard Geometric Representation

The standard geometric representation of IfcSite is defined using **explicit geometry.** The faceted B-Rep capabilities (with or without voids) shall be supported for standard representation of the site contour.

Currently, the usage of attribute driven geometry for IfcSite is not supported.

Advanced Geometric Representation

The advanced geometric representation of IfcSite is defined using **explicit geometry**. The faceted B-Rep capabilities (with or without voids) shall be supported for standard representation of the site contour.

Currently, the usage of attribute driven geometry for IfcSite is not supported.

Arbitrary Geometric Representation

The arbitrary geometric representation of IfcSite is defined using **explicit geometry**. The faceted B-Rep capabilities (with or without voids) shall be supported for arbitrary representation.

Currently, there is no difference in the usage of standard, advanced or arbitrary geometric representations for IfcSite.

Copyright © International Alliance for Interoperability - 1996-1999

17.24. Class IfcSpace

17.24.1. Class Semantic Definition

Definition from IAI: A Space represents an area or volume bounded actually or theoretically. Spaces are areas or volumes that provide for certain functions within a building. The following figure describes the height attributes of the IfcSpace.

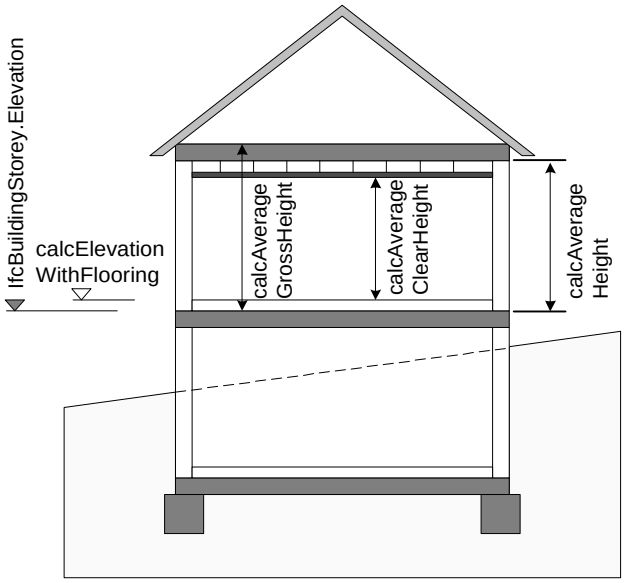

ISSUE See issue I-119, I-193 for changes made in IFC Release 1.5.

History

This Entity has changed after IFC Release 1.5.1, please see the Migration Guide for details

17.24.2. Attribute and Relationship Definitions

Superclasses and Subclasses

IfcRoot
- IfcObject
  - IfcProduct
    - IfcSpatialElement
      - **IfcSpace**
        - IfcWorkstation
        - IfcFireCompartment

Attributes and Relationships

	Attribute / Relation	Definition	Data or Rel. Type	Min.	Max.	Default
	BoundedBy	Reference to Set of Space Boundaries that defines the physical or virtual delimitation of that Space.	LIST [1:?] OF IfcSpaceBoundary	n/a	n/a	n/a
	InteriorOrExteriorSpace	Defines, whether the Space is interior (Internal), or exterior (External), i.e. part of the outer space.	IfcInternalOrExternalEnum	Internal	NotDefined	NotDefined
OPT	SpaceReference	Short name for the space as used for reference purposes.	STRING	see type	see type	n/a
OPT	SpaceName	Long name for the space.	STRING	see type	see type	n/a

Copyright © International Alliance for Interoperability - 1996-1999

OPT	calcTotalPerimeter	Total Gross (physical) Perimeter of that Space. Exposed as an attribute by file-based exchange.	IfcPositiveLengthMeasure	0	see type	1
OPT	calcTotalArea	Total Gross (physical) Area of the floor level of that Space. Exposed as an attribute by file-based exchange.	IfcAreaMeasure	0	see type	1
OPT	calcTotalVolume	Total Gross (physical) Volume of that Space. Exposed as an attribute by file-based exchange.	IfcVolumeMeasure	0	see type	1
OPT	calcAverageHeight	Floor Height (without flooring) to Ceiling height (without suspended ceiling) for this space (measured from top of slab of this space to the bottom of slab of space above); the average shall be taken if room shape is not prismatic.	IfcPositiveLengthMeasure	see type	see type	1
OPT	calcAverageGrossHeight	Floor Height to Floor Height for this space (measured from top of slab of this space to top of slab of space above); the average shall be taken if room shape is not prismatic.	IfcPositiveLengthMeasure	see type	see type	1
OPT	calcAverageClearHeight	Clear Height between floor level (including finish) and ceiling level (including finish and sub construction) of this space; the average shall be taken if room shape is not prismatic.	IfcPositiveLengthMeasure	see type	see type	1
OPT	calcElevationWithFlooring	Level of flooring of this space; the average shall be taken, if the space ground surface is sloping or if there are level differences within this space.	IfcLengthMeasure	see type	see type	1
INV	IsAssemblyThrough	Reference to the assembly relationship that creates spaces that are assemblies. It defines via the RelatingObject side this Space as the assembly of other Spaces.	SET [0:1] OF IfcRelAssemblesSpaces	n/a	n/a	NIL
INV	PartOfAssembly	Reference to the assemble relationship, that creates space assembly in which the actual space is defined as a partial space.	SET [0:1] OF IfcRelAssemblesSpaces	n/a	n/a	NIL

Formal Propositions

WR52	There shall be exactly one instance of the IfcRelContains objectified relationship that defines a ProjectContainer, i.e. referencing an IfcProject to contain this instance of IfcSpace.
WR53	The allowed subtypes of IfcProduct that can act as space containers are: IfcSite and IfcBuildingStorey. NOTE: This rule replaces the former SELECT type IfcSpaceContainer. There shall be only one instance of the IfcRelContains objectified relationship that contains (ContainedOrReferenced = TRUE) this instance of IfcSpace. The relationship type shall therefore be either SiteContainer, or BuildingStoreyContainer.

17.24.3. Interface Definitions

- I_Space

Copyright © International Alliance for Interoperability - 1996-1999

17.24.4. Geometry Use Definitions

Object Geometry in Context

The geometric representation of IfcSpace is given by the IfcProductShape and IfcLocalPlacement allowing multiple geometric representations.

NOTE If the surrounding instances of IfcSpaceBoundary define a complete geometric representation of a particular representation view, than this view shall be omitted at the ProductShape of IfcSpace.

Included are:

Local Placement

The local placement for IfcSpace is defined in its supertype IfcProduct. It is defined by the

- IfcLocalPlacement, which defines the local coordinate system that is referenced by all geometric representations. The PlacementRelTo relationship of IfcLocalPlacement shall point to the IfcBuildingStorey, if the containing building storey is defined for this space and if relative placement is used for this space.

Standard Geometric Representation

The standard geometric representation of IfcSpace is defined using the **attribute driven geometry**. The following constraints apply to the standard representation:

- *Solid*: IfcAttDrivenExtrudedSolid is required, referring to a single segment,
- *Segment*: IfcAttDrivenExtrudedSegment is required,
- *Profile*: IfcRectangleProfileDef and IfcArbitraryProfileDef shall be supported.
- *Extrusion*: The profile shall be extruded vertically, i.e., along the positive Z Axis of the co-ordinate system of the element container, i.e. site or building storey

Example for standard geometric representation

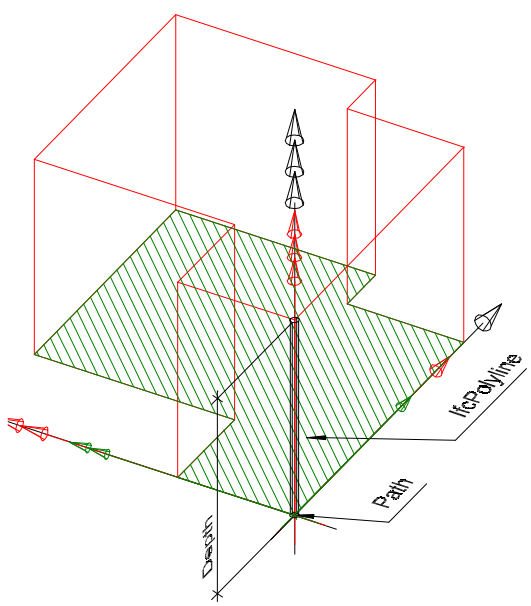

Extrusion

Extrusion path, for standard representation given by IfcAttDrivenExtrudedSolid referencing a single IfcAttDrivenExtrudedSegment
Default Type: **IfcAttDrivenExtrudedSegment**

- IfcAttDrivenExtrudedSegment.Depth, Extrusion path defined by a positive length measure along the local z-axis, it equals to the semantic attribute: MaximumHeight of the IfcSpace.

Profile

Extrusion profile, for standard representation given by IfcAttDrivenExtrudedSegment referencing IfcAttDrivenProfileDef
Default Type: IfcArbitraryProfileDef

- IfcBoundedCurve (closed and 2D), defining the foot print of the Space, here IfcPolyline.

Extrusion Direction

The space foot print is extruded vertically, i.e. perpendicular to the ground surface, which is supposed to be horizontal.

Placement

[Black arrows] The local placement of space is placed relative to the co-ordinate system of the containing element (Building Storey).
[Red arrows] The segment is placed relative to the local placement.
[Green arrows] The profile is placed relative to the XY plane of the placement co-ordinate system of the segment. It defaults to location [0.,0.] and P ([1.,0.],[0.,1.]).

Advanced Geometric Representation

The advanced geometric representation of IfcSpace is defined using the **attribute driven geometry**. The following constraints apply to the advanced representation:

Copyright © International Alliance for Interoperability - 1996-1999

- *Solid*: IfcAttDrivenExtrudedSolid and IfcAttDrivenClippedExtrudedSolid is required, referring to a single or multiple segments,
- *Segment*: IfcAttDrivenExtrudedSegment is required,
- *Profile*: IfcRectangleProfileDef and IfcArbitraryProfileDef shall be supported.
- *Extrusion*: The profile shall be extruded vertically, i.e., along the positive Z Axis of the co-ordinate system of the element container, i.e. site or building storey

Example for advanced geometric representation

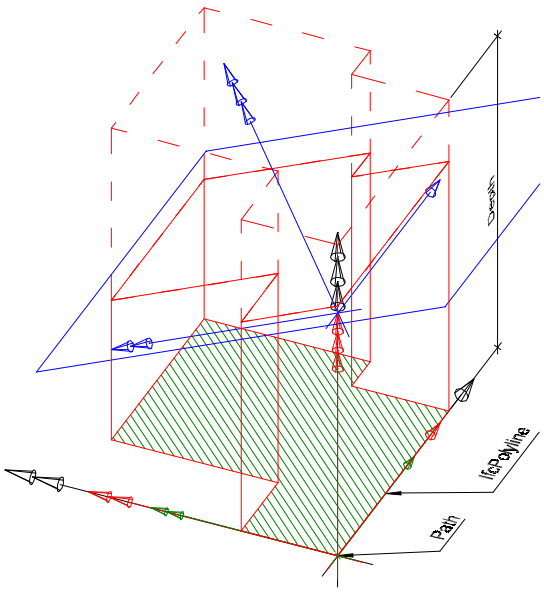

Extrusion

Extrusion path for advanced representation here given by IfcAttDrivenExtrudedSolid referencing a single IfcAttDrivenExtrudedSegment
Default Type: **IfcAttDrivenExtrudedSegment**

- IfcAttDrivenExtrudedSegment.Depth, Extrusion path defined by a positive length measure along the local z-axis, it equals to the semantic attribute: MaximumHeight of the IfcSpace.

Profile

Extrusion profile, for standard representation given by IfcAttDrivenExtrudedSegment referencing IfcAttDrivenProfileDef
Default Type: IfcArbitraryProfileDef

- IfcBoundedCurve (closed and 2D), defining the foot print of the Space, here IfcPolyline.

Extrusion Direction

The space foot print is extruded vertically, i.e. perpendicular to the ground surface, which is supposed to be horizontal.

Solid

For allowing sloped room ceilings the IfcAttDrivenClippedExtrudedSolid has to be supported for advanced geometric representation. Therefore clipping half spaces (bounded and unbounded) shall be supported.
Default Type: IfcHalfSpaceSolid

- IfcHalfSpaceSolid defined in the local co-ordinate system of the space.

Placement

[Black arrows] The local placement of space is placed relative to the co-ordinate system of the containing element (Building Storey).
[Red arrows] The segment is placed relative to the local placement.
[Green arrows] The profile is placed relative to the XY plane of the placement co-ordinate system of the segment. It defaults to location [0.,0.] and P ([1.,0.],[0.,1.]).
[Blue arrow] The placement co-ordinate system of the clipping half space is placed relative to the local placement.

Arbitrary Geometric Representation

The arbitrary geometric representation of IfcSpace is defined using **explicit geometry**. The faceted B-Rep capabilities (with or without voids) shall be supported for arbitrary representation.

17.25. Class IfcSpaceBoundary

17.25.1. Class Semantic Definition

Definition from IAI: The Space Boundary defines the physical or virtual delimiter of a Space. In case of physical Space Boundary, the Place and Shape is determined by the Element that provides the Space Boundary by virtue of the IfcRelSeparatesSpaces Relationship. In the case of virtual Space Boundary, the Place and Shape is given using the shape representation property defined for all Products. The following figure describes the area attribute (gray area) of the each IfcSpaceBoundary between two adjacent spaces.

Copyright © International Alliance for Interoperability - 1996-1999

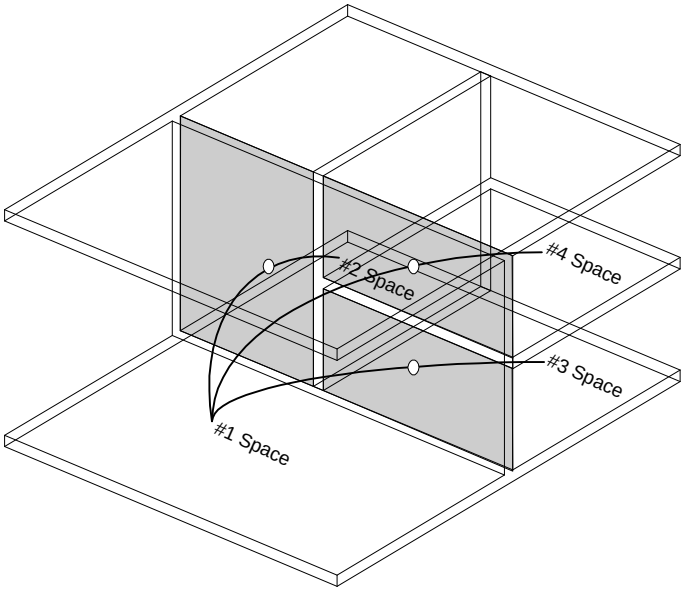

ISSUE See issue I-193 for changes made in IFC Release 1.5.

History

This Entity has changed after IFC Release 1.5.1, please see the Migration Guide for details

17.25.2. Attribute and Relationship Definitions

Superclasses and Subclasses

IfcRoot
IfcObject
IfcProduct
IfcSpatialElement
IfcSpaceBoundary

Attributes and Relationships

	Attribute / Relation	Definition	Data or Rel. Type	Min.	Max.	Default
	PhysicalOrVirtualBoundary	Defines, whether the Space Boundary is physical (Physical) or virtual (Virtual)	IfcPhysicalOrVirtualEnum	Physical	NotDefined	NotDefined
	InternalOrExternalBoundary	Defines, whether the Space Boundary is internal (Internal), or external, i.e. adjacent to open space (that can be an partially enclosed space, such as terrace (External).	IfcInternalOrExternalEnum	Internal	NotDefined	NotDefined
OPT	calcBoundarySurfaceArea	Total Gross (physical) Area of the boundary surface area facing the space. Exposed as an attribute by file-based exchange, particularly for receiving applications with limited (or not existing) geometric capabilities.	IfcAreaMeasure	0	see type	0
INV	Bounds	Reference to one or two spaces that are delimited by this Boundary	SET [1:2] OF IfcSpace	n/a	n/a	NIL
INV	ProvidedBy	Reference to the objectified relationship that manages the	SET [0:1] OF IfcRelSeparatesSpaces	n/a	n/a	NIL

Copyright © International Alliance for Interoperability - 1996-1999

		Element to Space Boundary relationship, i.e. defines which Element provides the Space Boundary for a particular Space				

Formal Propositions

WR51	If the Space Boundary is physical, it shall be provided by an Element by virtue of the objectified relationship IfcRelSeparatesSpaces.

17.25.3. Interface Definitions

- I_SpaceBoundary

17.25.4. Geometry Use Definitions

Object Geometry in Context

The geometric representation of IfcSpaceBoundary is given by the IfcProductShape and IfcLocalPlacement allowing multiple geometric representations. Included are:

Local Placement

The local placement for IfcSpaceBoundary is defined in its supertype IfcProduct. It is defined by the

- IfcLocalPlacement, which defines the local coordinate system that is referenced by all geometric representations. The PlacementRelTo relationship of IfcLocalPlacement shall point to the IfcBuildingStorey, if the containing building storey is defined for the space that is separated by the space boundary, and if relative placement is used for this IfcSpaceBoundary.

Standard Geometric Representation

The standard geometric representation of IfcSpaceBoundary is defined using **explicit geometry**. The IfcPolyLoop is the required geometric representation for IfcSpaceBoundary.

Currently, the usage of attribute driven geometry for IfcSpaceBoundary is not supported.

Advanced Geometric Representation

The advanced geometric representation of IfcSpaceBoundary is defined using **explicit geometry**. The IfcPolyLoop is the required geometric representation for IfcSpaceBoundary.

Currently, the usage of attribute driven geometry for IfcSpaceBoundary is not supported.

Arbitrary Geometric Representation

The arbitrary geometric representation of IfcSpaceBoundary is defined using **explicit geometry**. The IfcPolyLoop is the required geometric representation for IfcSpaceBoundary.

Currently, there is no difference in the usage of standard, advanced or arbitrary geometric representations for IfcSpaceBoundary.

17.26. Class IfcSpatialElement

17.26.1. Class Semantic Definition

Definition from IAI: Abstract Supertype for all space related entities. These are either Spaces or Space Boundaries.

Copyright © International Alliance for Interoperability - 1996-1999

17.26.2. Attribute and Relationship Definitions

Superclasses and Subclasses

IfcRoot
IfcObject
IfcProduct
IfcSpatialElement
IfcSpace
IfcSpaceBoundary

Attributes and Relationships

No attributes defined at this level.

17.26.3. Interface Definitions

- I_SpatialElement

17.26.4. Geometry Use Definitions

There are no instances of this abstract class. However, subtypes of this class do have geometry defined.

17.27. Class IfcSystem

17.27.1. Class Semantic Definition

Definition from IAI: Organized combination of related parts within an AEC product, composed for a common purpose or function or to provide a service. System is essentially a functional related aggregation of products. The aggregation relationship to IfcProduct is handled by IfcRelGroups.

17.27.2. Attribute and Relationship Definitions

Superclasses and Subclasses

IfcRoot
IfcObject
IfcGroup
IfcSystem

Attributes and Relationships

	Attribute / Relation	Definition	Data or Rel. Type	Min.	Max.	Default
INV	ServicesBuildings	Reference to the building via the objectified relationship IfcRelServicesBuildings, which is serviced by the system	SET [0:1] OF IfcRelServicesBuildings	n/a	n/a	NIL

17.27.3. Interface Definitions

- I_System

Copyright © International Alliance for Interoperability - 1996-1999

17.27.4. Geometry Use Definitions

Instances of this class have no physical presence and therefore no geometric representation. However, they do contain other elements that do have geometry.

17.28. Class IfcZone

17.28.1. Class Semantic Definition

Definition from IAI: Modular or non-modular space between modular planes, which is provided for a component or a group of components which do not necessarily fill the space, or which may be left empty.

IfcZone is essentially an aggregation of Spaces, Partial Spaces or other Zones. It is view based delimited volume for the purpose of analysis and calculation. They cannot overlap with respect to that analysis. The IfcZone is also used to represent building sections by grouping the spaces of that section within a special zone.

17.28.2. Attribute and Relationship Definitions

Superclasses and Subclasses

IfcRoot
  IfcObject
    IfcGroup
      IfcZone

Attributes and Relationships

No attributes defined at this level.

Formal Propositions

WR41	A Zone is grouped by the objectified relationship IfcRelGroups, Only objects of type IfcSpace or IfcZone are allowed as RelatedObjects at referencing IfcRelGroups.

17.28.3. Interface Definitions

- I_Zone

17.28.4. Geometry Use Definitions

Instances of this class have no physical presence and therefore no geometric representation. However, they do contain other elements, which do have geometry.

17.29. Function IfcNoOfLayers

17.29.1. Function Semantic Definition

Definition IAI: This function returns the actual number of layers within an assigned material or material layer set.

Copyright © International Alliance for Interoperability - 1996-1999

17.30. PropertySet Pset_Asset

17.30.1. PropertySet Semantic Definition

Definition from IAI: Properties common to the definition of all objects regards as assets.

17.30.2. Attribute and Relationship Definitions

Property Name	Definition	Property Type	Data or Rel. Type	Min.	Max.	Default
OwnedNotLeased	Indication whether the asset is owned (TRUE) or leased (FALSE)	IfcSimpleProperty	IfcBoolean	FALSE	TRUE	TRUE
Owner	The owner/user of this asset (one of the building tenants)	IfcObjectReference	IfcPersonAndOrganization	n/a	n/a	NIL
Type	More specific description about the type of the asset	IfcSimpleProperty	IfcString	n/a	n/a	empty string
Description	General description of the asset type	IfcSimpleProperty	IfcString	n/a	n/a	empty string
CurrentEstimatedValue	The current 'book' value of the asset	IfcObjectReference	IfcCost	0	see type	0

17.31. PropertySet Pset_BuildingCommon

17.31.1. PropertySet Semantic Definition

Definition from IAI: Properties common to the definition of all IfcBuilding.

17.31.2. Attribute and Relationship Definitions

Property Name	Definition	Property Type	Data or Rel. Type	Min.	Max.	Default
Description	General description of the building	IfcSimpleProperty	IfcString	n/a	n/a	empty string

17.32. PropertySet Pset_BuildingStoreyCommon

17.32.1. PropertySet Semantic Definition

Definition from IAI: Properties common to the definition of all IfcBuildingStorey.

17.32.2. Attribute and Relationship Definitions

Property Name	Definition	Property Type	Data or Rel. Type	Min.	Max.	Default
Description	Description for this type of the building storey	IfcSimpleProperty	IfcString	see type	see type	empty string

Copyright © International Alliance for Interoperability - 1996-1999

17.33. PropertySet Pset_ElementQuantities

17.33.1. PropertySet Semantic Definition

17.33.2. Attribute and Relationship Definitions

Property Name	Definition	Property Type	Data or Rel. Type	Min.	Max.	Default
QuantityCalcStandard	The standard by which the quantities in this Pset are calculated. If not specified, measures are simple geometry calculations	IfcSimpleProperty	IfcString	see type	see type	empty string
LengthQuantity	The 1D length of this element (measured according to the standard). If standard not specified, then simple calculation of 1D length.	IfcSimpleProperty	IfcPositiveLengthMeasure	0	see type	0
AreaQuantity	The 2D area of this element (measured according to the standard). If standard not specified, then simple calculation of 2D surface area.	IfcSimpleProperty	IfcAreaMeasure	0	see type	0
VolumeQuantity	The 3D volume of this element (measured according to the standard). If standard not specified, then simple 3D volume calculation.	IfcSimpleProperty	IfcVolumeMeasure	0	see type	0
WeightQuantity	The weight of this element (measured according to the standard). If standard not specified, then physical weight as calculated from volumne and density.	IfcSimpleProperty	IfcMassMeasure	0	see type	0
CountQuantity	The count (number) of the element (measured according to the standard).	IfcSimpleProperty	IfcCountMeasure	0	see type	1
LengthQuantityDescription	Description for or about the length quantity value extraction	IfcSimpleProperty	IfcString	see type	see type	empty string
AreaQuantityDescription	Description for or about the area quantity value extraction	IfcSimpleProperty	IfcString	see type	see type	empty string
VolumeQuantityDescription	Description for or about the volume quantity	IfcSimpleProperty	IfcString	see type	see type	empty string

Copyright © International Alliance for Interoperability - 1996-1999

	value extraction					
WeightQuantityDescription	Description for or about the weight quantity value extraction	IfcSimpleProperty	IfcString	see type	see type	empty string
CountQuantityDescription	Description for or about the count quantity value extraction	IfcSimpleProperty	IfcString	see type	see type	empty string
Azimuth	Azimuth of the element as derived from the placement of the element shape, by convention: North = 0' and measurement is done clockwise (i.e. south = 90', if unit is grad) – the calculation procedure will be specific for each type of element. The following translations apply: G: Himmelsrichtung des Bauteils, J: HOUI-KAKU	IfcSimpleProperty	IfcPositivePlaneAngleMeasure	0	see type	0
Inclination	Azimuth of the element as derived from the placement of the element shape, by convention: Vertical = 0', horizontal = 90', if unit is grad) – the calculation procedure will be specific for each type of element. The following translations apply: G: Bauteilneigung, J: KEISHA-KAKU	IfcSimpleProperty	IfcPositivePlaneAngleMeasure	0	see type	0

17.34. PropertySet Pset_ManufactureOccurrence

17.34.1. PropertySet Semantic Definition

Definition from IAI: Properties about the occurrence specific manufacturer information. Can be attached to all IfcElement.

17.34.2. Attribute and Relationship Definitions

Property Name	Definition	Property Type	Data or Rel. Type	Min.	Max.	Default
SerialNumber	The serial number assigned to the individual manufactured item	IfcSimpleProperty	IfcString	see type	see type	empty string
AcquisitionDate	The date that the manufactured item was purchased	IfcObjectReference	IfcCalendarDate	see type	see type	0

Copyright © International Alliance for Interoperability - 1996-1999

17.35. PropertySet Pset_OpeningElementCommon

17.35.1. PropertySet Semantic Definition

Definition from IAI: Properties common to the definition of all generic opening types 'Recess' of IfcOpeningElement.

17.35.2. Attribute and Relationship Definitions

Property Name	Definition	Property Type	Data or Rel. Type	Min.	Max.	Default
Description	Description of this opening.	IfcSimpleProperty	IfcString	n/a	n/a	empty string

17.36. PropertySet Pset_SiteCommon

17.36.1. PropertySet Semantic Definition

Definition from IAI: Properties common to the definition of all IfcSite.

17.36.2. Attribute and Relationship Definitions

Property Name	Definition	Property Type	Data or Rel. Type	Min.	Max.	Default
Description	Description for this type of Site (note name is captured in the TypeDef object that references this PropertySet)	IfcSimpleProperty	IfcString	see type	see type	empty string
BuildableArea	Area of site that can be covered by buildings - according to local building codes.	IfcSimpleProperty	IfcAreaMeasure	0	see type	0
BuildingHeightLimit	Calculated maximum height of buildings on this site - according to local building codes.	IfcSimpleProperty	IfcPositiveLengthMeasure	0	see type	1

17.37. PropertySet Pset_SpaceCommon

17.37.1. PropertySet Semantic Definition

Definition from IAI: Properties common to the definition of all IfcSpace.

17.37.2. Attribute and Relationship Definitions

Property Name	Definition	Property Type	Data or Rel. Type	Min.	Max.	Default
Description	Description for this type of Space	IfcSimpleProperty	IfcString	see type	see type	empty string
CodeUseType	Occupancy type, as defined in the presiding building code.	IfcSimpleProperty	IfcString	see type	see type	empty string
SpaceCatalogue	Description of the space catalogue	IfcSimpleProperty	IfcString	see type	see type	empty string

Copyright © International Alliance for Interoperability - 1996-1999

ReqSommerSpaceTemperature	Temperature for the hot (summer) period, that is required from user/designer view point.	IfcSimplePropertyWithUnit	IfcReal, ThermodynamicTemperatureUnit	n/a	n/a	n/a
ReqSummerSpaceHumidity	Humidity for the hot (summer) period, that is required from user/designer view point.	IfcSimplePropertyWithUnit	IfcReal, ThermodynamicHumidityUnit	n/a	n/a	n/a
ReqWinterSpaceTemperature	Temperature for the cold (winter) period, that is required from user/designer view point.	IfcSimplePropertyWithUnit	IfcReal, ThermodynamicTemperatureUnit	n/a	n/a	n/a
ReqWinterSpaceHumidity	Humidity for the cold (winter) period, that is required from user/designer view point.	IfcSimplePropertyWithUnit	IfcReal, ThermodynamicHumidityUnit	n/a	n/a	n/a
ReqIntermediateSpaceTemperature	Temperature for the intermediate (spring, autumn) period, that is required from user/designer view point.	IfcSimplePropertyWithUnit	IfcReal, ThermodynamicTemperatureUnit	n/a	n/a	n/a
ReqIntermediateSpaceHumidity	Humidity for the intermediate (spring, autumn) period, that is required from user/designer view point.	IfcSimplePropertyWithUnit	IfcReal, ThermodynamicHumidityUnit	n/a	n/a	n/a
ReqDiscontinuedHeating	True if discontinued heating is required/desirable from user/designer view point.	IfcSimpleProperty	IfcBoolean	TRUE	FALSE	FALSE
MainFireUse	Main fire use for the space which is assigned from the Fire Use Classification.	IfcSimpleProperty	IfcString	see type	see type	empty string
AncillaryFireUse	Ancillary fire use for the space which is assigned from the Fire Use Classification.	IfcSimpleProperty	IfcString	see type	see type	empty string
FireRiskFactor	Fire Risk factor assigned to the space	IfcSimpleProperty	IfcInteger	see type	see type	1
NaturalVentilation	Indication whether the space is ventilated natural (true) or mechanical (false).	IfcSimpleProperty	IfcBoolean	see type	see type	TRUE
SprinklerProtection	Indication whether the space is sprinkler protected (true) or not (false).	IfcSimpleProperty	IfcBoolean	see type	see type	FALSE

17.38. PropertySet Pset_SystemCommon

17.38.1. PropertySet Semantic Definition

Definition from IAI: Properties common to the definition of all IfcSystem.

17.38.2. Attribute and Relationship Definitions

Property Name	Definition	Property Type	Data or Rel. Type	Min.	Max.	Default
Description	Description for this type of System	IfcSimpleProperty	IfcString	see type	see type	empty string

Copyright © International Alliance for Interoperability - 1996-1999

17.39. PropertySet Pset_ZoneCommon

17.39.1. PropertySet Semantic Definition

Definition from IAI: Properties common to the definition of all IfcZone.

17.39.2. Attribute and Relationship Definitions

Property Name	Definition	Property Type	Data or Rel. Type	Min.	Max.	Default
Description	Description for this type of Zone	IfcSimpleProperty	IfcString	see type	see type	empty string
maxCeilingHeight	maximal height of the ceiling in the highest storey that is included in the zone.	IfcSimpleProperty	IfcLengthMeasure	see type	see type	n/a
maxFlooringHeight	maximal height of the flooring in the highest storey that is included in the zone.	IfcSimpleProperty	IfcLengthMeasure	see type	see type	n/a

18. IfcProjectMgmtExtension

The models in IfcProjectManagementExtension schema are abstract concepts used in project management processes in the general sense. They represent ways, conventions, methods, functions, and tools of how project management is generally performed. Most of the concepts in this schema don't have physical appearances. These models also support both construction management and facilities management, while the latter two schemas focus on more specific domain processes.

In IFC R2.0, the IfcProjectManagementExtension schema contains models that represent concepts such as budgets, cost estimates (or cost schedules), and project orders including change orders, purchase orders, and work orders.

HISTORY: new schema in IFC Release 2.0
IfcApproval is moved to IfcControlExtension

18.1. Type IfcChangeOrderStatusEnum

18.1.1. Type Semantic Definition

History

New Enumeration in IFC Release 2.0

18.1.2. Enumeration

Proposing
Proposed
Requested
BeingApproved
Planning
WorkStarted
WorkDelayed

Copyright © International Alliance for Interoperability - 1996-1999

WorkDone
UserDefined
NotDefined

18.2. Type IfcCostUseEnum

18.2.1. Type Semantic Definition

History

New Enumeration in IFC Release 2.0

18.2.2. Enumeration

ExtensionOnly
ElementOnly
ElementSetExtensionCalc
ExtensionSetElementCalc
UserDefined
NotDefined

18.3. Type IfcPurchaseOrderStatusEnum

18.3.1. Type Semantic Definition

History

New Enumeration in IFC Release 2.0

18.3.2. Enumeration

Requested
BeingApproved
Issued
Received
ItemsReceived
UserDefined
NotDefined

18.4. Type IfcWorkOrderStatusEnum

18.4.1. Type Semantic Definition

History New Enumeration in IFC Release 2.0

18.4.2. Enumeration

Requested

Copyright © International Alliance for Interoperability - 1996-1999

BeingApproved
Planning
WorkStarted
WorkDelayed
WorkDone
UserDefined
NotDefined

18.5. Class IfcBudget

18.5.1. Class Semantic Definition

This classes represents a cost budget (i.e. an amount of money available from a source) available for projects. This class also allows tracking the history of the budget uses. The details of budget assignment and usage for multiple projects or plans are not handled in this class. IfcBudget is a subtype of IfcControl.

History

New Entity in IFC Release 2.0

18.5.2. Attribute and Relationship Definitions

Superclasses and Subclasses

IfcRoot
  IfcObject
    IfcControl
      IfcCostSchedule
        IfcBudget

Attributes and Relationships

	Attribute / Relation	Definition	Data or Rel. Type	Min.	Max.	Default
	BudgetNumber	The code number for the budget, given by user	STRING	empty string	n/a	empty string
OPT	Description	General description of the budget	STRING	empty string	n/a	empty string
OPT	BudgetSource	Description of the source of the budget	STRING	empty string	n/a	empty string
	Balance	the balance available on the budget. This value can also be calculated or derived from its base type IfcCost Schdule attribute values.	IfcCost	see type	see type	see type
	AvailableDate	The date that the budget becomes available	IfcDateTimeSelect	see type	see type	see type
OPT	AvailableDuration	The time longevity of the budget	IfcTimeMeasure	see type	see type	see type
OPT	BaseBudget	This allows tracking of the current budget status to date compared to the last previous budget.	IfcBudget	see type	see type	see type
	UpdateDate	The date that this budet is updated; this allows tracking the budget usage history	IfcDateTimeSelect	see type	see type	see type

Copyright © International Alliance for Interoperability - 1996-1999

18.5.3. Interface Definitions

- I_Budget

18.5.4. Geometry Use Definitions

Instances of this class have no physical presence and therefore no geometric representation.

18.6. Class IfcChangeOrder

18.6.1. Class Semantic Definition

IfcChangeOrder represents a change order in a construction project. A change order can reference to the building elements such as walls to be changed through the control relationship (IfcRelControl) provided through IfcObject. A change order can also reference to the design documents that are to be changed. The document(s) that represents the change order itself can also be referenced through the IfcDocumentReference from IfcObject. It also specifies the cost estimate and work plan for the work requested by the change order. In addition to the properties provided by IfcProjectOrder, it also specify information such as change description, reasons for change, requested start time and requested finish time. IfcChangeOrder is a subtype of IfcProjectOrder.

History

New Entity in IFC Release 2.0

18.6.2. Attribute and Relationship Definitions

Superclasses and Subclasses

IfcRoot
  IfcObject
    IfcControl
      IfcProjectOrder
        IfcChangeOrder

Attributes and Relationships

	Attribute / Relation	Definition	Data or Rel. Type	Min.	Max.	Default
OPT	ChangeDescription	A general description of the change	STRING	empty string	n/a	empty string
OPT	ReasonForChange	A description of the problem for why a change is needed	STRING	empty string	n/a	empty string
OPT	RequestedStartTime	the start date requested for the work of change	IfcDateTimeSelect	see type	see type	see type
OPT	RequestedFinishTime	the finish date requested for the work of change	IfcDateTimeSelect	see type	see type	see type
	DocumentsForChange	The design, specification, or plan documents that the change needs to be made for.	SET [0:?] OF IfcDocumentReference	n/a	n/a	n/a
OPT	CostEstimate	The cost estimate for the change.	IfcCostSchedule	see type	see type	see type
OPT	WorkPlan	The work plan for the change.	IfcWorkPlan	see type	see type	see type
	Status	The status of the change order.	IfcChangeOrderStatusEnum	Proposing	WorkDone	Proposing

Copyright © International Alliance for Interoperability - 1996-1999

18.6.3. Interface Definitions

- I_ChangeOrder

18.6.4. Geometry Use Definitions

Instances of this class have no physical presence and therefore no geometric representation.

18.7. Class IfcCostElement

18.7.1. Class Semantic Definition

IfcCostElement is a cost with context information. It represents goods, services, or the execution of works of a described elemental nature in given conditions. This entity also has the capability of nesting other elements of the same type (i.e. IfcCostElement) through its relationships to IfcRelNestsCostElements.

The relationship to IfcObject through IfcRelCostsObjects specifies the objects to be costed by IfcCostElement instances. The following figure shows a cost element:

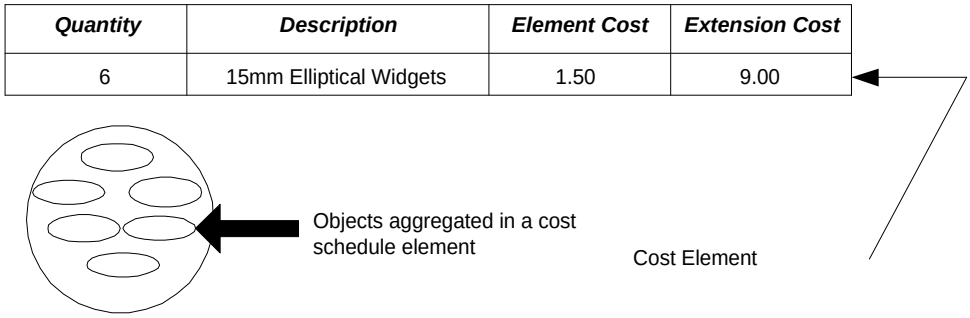

History

New Entity in IFC Release 2.0

18.7.2. Attribute and Relationship Definitions

Superclasses and Subclasses

IfcRoot
  IfcObject
    IfcControl
      IfcCostElement

Attributes and Relationships

	Attribute / Relation	Definition	Data or Rel. Type	Min.	Max.	Default
OPT	Description	General description of the cost element.	STRING	empty string	n/a	empty string
	ContextDescription	The contextual information of the cost such as purchase cost, installation cost, consulting cost, etc.	STRING	empty string	n/a	empty string
OPT	ElementCost	The cost of a single item of each 'Quantity'. It can be either a unit cost or an item cost depending on the context of the cost element.	IfcCost	see type	see type	see type

Copyright © International Alliance for Interoperability - 1996-1999

OPT	ExtensionCost	The summarized the cost of this cost element.	IfcCost	see type	see type	see type
	CostUse	Indicates how the value of the ElementCost and ExtensionCost is provided and thus how they should be used.	IfcCostUseEnum	ExtensionOnly	NoteDefined	ExtensionOnly
OPT	PreparedOn	The date that the cost is provided.	IfcDateTimeSelect	see type	see type	see type
OPT	Quantity	Indicates the quantity of the items refered by the cost element.	IfcMeasureWithUnit	see type	see type	see type
INV	CostSchedule	A reference to the cost schedule that the cost element belongs to.	IfcCostSchedule	see type	see type	see type

Formal Propositions

WR41	Restrict the relationship 'Nests' inherited from IfcObject to IfcRelNestsCostElement.
WR42	Restrict the relationship 'IsNestedBy' inherited from IfcObject to IfcRelNestsCostElement.
WR43	

18.7.3. Interface Definitions

- I_CostElement

18.7.4. Geometry Use Definitions

Instances of this class have no physical presence and therefore no geometric representation.

18.8. Class IfcCostSchedule

18.8.1. Class Semantic Definition

IfcCostSchedule is a class that contains a list of cost elements. It provides information such as a total cost, description and title of the cost schedule, a date when it is prepared and persons who prepared it. In IFC R2.0, it is used to represent a cost estimate and provide a super-type for IfcBudget. The following figure shows how a cost schedule would be used to present cost data.

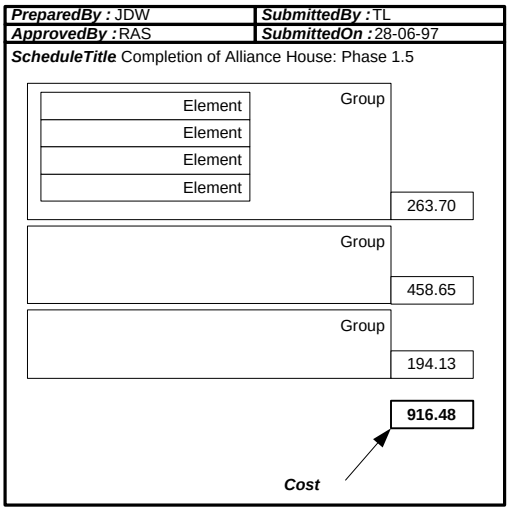

Copyright © International Alliance for Interoperability - 1996-1999

History

New Entity in IFC Release 2.0

18.8.2. Attribute and Relationship Definitions

Superclasses and Subclasses

IfcRoot
  IfcObject
    IfcControl
      IfcCostSchedule
        IfcBudget

Attributes and Relationships

	Attribute / Relation	Definition	Data or Rel. Type	Min.	Max.	Default
	Title		STRING	empty string	n/a	empty string
OPT	SubmittedBy		IfcActorSelect	see type	see type	see type
	ApprovedBy		SET [0:?] OF IfcActorSelect	see type	see type	see type
	PreparedBy		IfcActorSelect	see type	see type	see type
OPT	SubmittedOn		IfcDateTimeSelect	see type	see type	see type
	TotalCost	the total cost on the schedule	IfcCost	see type	see type	see type
	CostElements		LIST [0:?] OF IfcCostElement	n/a	n/a	n/a

Formal Propositions

WR1	Restrict the relationship 'Nests' inherited from IfcObject to IfcRelNestsCostSchedules.
WR2	Restrict the relationship 'IsNestedBy' inherited from IfcObject to IfcRelNestsCostSchedules.

18.8.3. Interface Definitions

- I_CostSchedule

18.8.4. Geometry Use Definitions

Instances of this class have no physical presence and therefore no geometric representation.

18.9. Class IfcProjectOrder

18.9.1. Class Semantic Definition

This class represents common properties for project orders issued in a construction or facilities management project. The types of properties include a project order number, a general description, issuing date and company, the person who issued the project order, etc. The types of project orders handled in this release are change orders, purchase orders, and work orders. IfcProjectOrder is a subtype of IfcControl.

History

New Entity in IFC Release 2.0

Copyright © International Alliance for Interoperability - 1996-1999

18.9.2. Attribute and Relationship Definitions

Superclasses and Subclasses

IfcRoot
IfcObject
IfcControl
IfcProjectOrder
IfcChangeOrder
IfcPurchaseOrder
IfcWorkOrder

Attributes and Relationships

	Attribute / Relation	Definition	Data or Rel. Type	Min.	Max.	Default
	OrderNo	The identification ID of the purchase order	STRING	empty string	n/a	empty string
OPT	Description	A general description of the project order	STRING	empty string	n/a	empty string
OPT	TransactionCode	Transaction code	STRING	empty string	n/a	empty string
	IssuingDate	The date that the order is issued	IfcDateTimeSelect	see type	see type	see type
	IssuingCompany	the company that issues the project order	IfcOrganization	see type	see type	see type
	IssuedBy	the person who issued the change order	IfcActorSelect	see type	see type	see type
	IssuedTo	the persons or companies that receives the orders. E.g. for purchase order, this represents the suppliers or dealers.	SET [0:?] OF IfcActorSelect	n/a	n/a	N/a
	AdditionalContacts	Additional contact person regarding the request.	SET [0:?] OF IfcActorSelect	n/a	n/a	N/a
OPT	Remark	Any general remark comment	STRING	empty string	n/a	empty string

18.9.3. Interface Definitions

- I_ProjectOrder

18.9.4. Geometry Use Definitions

Instances of this class have no physical presence and therefore no geometric representation.

18.10. Class IfcPurchaseOrder

18.10.1. Class Semantic Definition

IfcChangeOrder represents a change order in a construction project. A change order can reference to the building elements such as walls to be changed through the control relationship (IfcRelControl) provided through IfcObject. A change order can also reference to the design documents that are to be changed. The document(s) that represents the change order itself can also be referenced through the IfcDocumentReference from IfcObject. It also specifies the cost estimate and work plan for the work requested by the change order. In addition to the properties provided by IfcProjectOrder, it also specify information such as change description, reasons for change, requested start time and requested finish time. IfcChangeOrder is a subtype of IfcProjectOrder.

Copyright © International Alliance for Interoperability - 1996-1999

History

New Entity in IFC Release 2.0

18.10.2. Attribute and Relationship Definitions

Superclasses and Subclasses

IfcRoot
IfcObject
IfcControl
IfcProjectOrder
IfcPurchaseOrder

Attributes and Relationships

	Attribute / Relation	Definition	Data or Rel. Type	Min.	Max.	Default
OPT	RequiredDate	the required date of receiving the requested items	IfcDateTimeSelect	see type	see type	see type
OPT	ScheduledDate	the scheduled date of receiving the requested items	IfcDateTimeSelect	see type	see type	see type
OPT	ActualDate	actual date of receiving the purchased items	IfcDateTimeSelect	see type	see type	see type
OPT	IsFOB	is Free of Board?; True means 'yes'; False means 'not'	BOOLEAN	TRUE	FALSE	TRUE
OPT	ShipMethod	method of shipping	STRING	empty string	n/a	empty string
OPT	PurchaseItems	Use a cost schedule to handle the list of items with both item description and cost of each cost element in the cost schedule.	IfcCostSchedule	see type	see type	see type
OPT	TotalCost	total cost of the purchase. It is derived value from 'PurchaseItems'	IfcCost	see type	see type	see type
	Status	The status of the purchase order	IfcPurchaseOrderStatusEnum	Requested	ItemsReceived	Requested
OPT	BudgetSource	The source of the budget the costs will be out from for the purchase	IfcBudget	see type	see type	see type

18.10.3. Interface Definitions

- I_PurchaseOrder

18.10.4. Geometry Use Definitions

Instances of this class have no physical presence and therefore no geometric representation.

18.11. Class IfcRelCostsObjects

18.11.1. Class Semantic Definition

This entity establishes a one-to-many relationship between IfcCostElement and IfcObject, so that an instance of IfcCostElement can be associated with instances of IfcObject. In IFCs all object cost information is provided through this objectified relationship. IfcRelCostsObjects is a subtype of IfcRelControls.

Copyright © International Alliance for Interoperability - 1996-1999

History

New Entity in IFC Release 2.0

18.11.2. Attribute and Relationship Definitions

Superclasses and Subclasses

IfcRoot
IfcRelationship
IfcRelControls
IfcRelCostsObjects

Attributes and Relationships

No attributes defined at this level.

Formal Propositions

WR41	The relating control object shall be of type IfcCostElement.

18.11.3. Interface Definitions

- I_RelCostsObjects

18.11.4. Geometry Use Definitions

This class has no geometry representation.

18.12. Class IfcRelNestsCostElements

18.12.1. Class Semantic Definition

This entity provides a model mechanism to allow IfcCostElement to contain other items of the same type. It provides the relationships between the nesting IfcCostElement and nested IfcCostElement(s). It is a subtype of IfcRelNests.

The next figure shows how cost elements can be grouped into one element, represented by cost elements being nested within another cost element (using the IfcRelNestsCostElements objectified relationship).

Copyright © International Alliance for Interoperability - 1996-1999

Description: Elliptical Widgets
Criteria:

6	15mm Elliptical Widgets	1.50	9.00
9	22mm Elliptical Widgets	2.50	22.50
4	28mm Elliptical Widgets	3.25	13.00
16	35mm Elliptical Widgets	4.60	76.80
12	42mm Elliptical Widgets	5.35	64.20
8	54mm Elliptical Widgets	7.15	57.20
2	65mm Elliptical Widgets	10.50	21.00

Cost 263.70

Elements

History

New Entity in IFC Release 2.0

18.12.2. Attribute and Relationship Definitions

Superclasses and Subclasses

IfcRoot
IfcRelationship
IfcRelNests
IfcRelNestsCostElements

Attributes and Relationships

	Attribute / Relation	Definition	Data or Rel. Type	Min.	Max.	Default
OPT	Description		STRING	empty string	n/a	empty string
OPT	Criteria	Criteria for nesting the cost elements.	STRING			

Formal Propositions

WR41	Nesting item must be of type IfcCostElement
WR42	Nested items must be of type IfcCostElement

18.12.3. Interface Definitions

- I_RelNestsCostElements

18.12.4. Geometry Use Definitions

Instances of this class have no physical presence and therefore no geometric representation.

Copyright © International Alliance for Interoperability - 1996-1999

18.13. Class IfcRelNestsCostSchedules

18.13.1. Class Semantic Definition

History

New Entity in IFC Release 2.0

18.13.2. Attribute and Relationship Definitions

Superclasses and Subclasses

IfcRoot
  IfcRelationship
    IfcRelNests
      IfcRelNestsCostSchedules

Attributes and Relationships

	Attribute / Relation	Definition	Data or Rel. Type	Min.	Max.	Default
OPT	Description		STRING			
OPT	Criteria	Criteria for nesting cost schedules.	STRING			

Formal Propositions

WR1	Nesting object must be of type IfcCostSchedule.
WR2	Nesting objects must be of type IfcCostSchedule.

18.13.3. Interface Definitions

- I_RelNestsCostSchedules

18.14. Class IfcWorkOrder

18.14.1. Class Semantic Definition

IfcWorkOrder represents a work order requested to accomplish a construction or a maintenance work. It contains information about the building components that require the work (by the control relationship, i.e. IfcRelControl, through IfcObject), descriptions of the job, work type, contractual type, requested or actual start and finish time, a cost estimate to the work order, a work plan for the work required, and a budget source for the work. IfcWorkOrder is a subtype of IfcProjectOrder.

History

New Entity in IFC Release 2.0

18.14.2. Attribute and Relationship Definitions

Superclasses and Subclasses

IfcRoot
  IfcObject
    IfcControl
      IfcProjectOrder

Copyright © International Alliance for Interoperability - 1996-1999

IfcWorkOrder

Attributes and Relationships

	Attribute / Relation	Definition	Data or Rel. Type	Min.	Max.	Default
OPT	ProductDescription	A textual description of the products that require the work.	STRING	empty sting	n/a	empty string
	ShortJobDescription	short description of the job requested	STRING	empty sting	n/a	empty string
OPT	LongJobDescription	description of the job requested	STRING	empty sting	n/a	empty string
OPT	WorkTypeRequested	work task type requested	STRING	empty sting	n/a	empty string
OPT	ContractualType	the contractual type of the work	STRING	empty sting	n/a	empty string
OPT	IfNotAccomplished	comments if the job is not accomplished	STRING	empty sting	n/a	empty string
OPT	RequestedStartTime		IfcDateTimeSelect	see type	see type	see type
OPT	RequestedFinishTime		IfcDateTimeSelect	see type	see type	see type
OPT	ActualStartTime		IfcDateTimeSelect	see type	see type	see type
OPT	ActualFinishTime		IfcDateTimeSelect	see type	see type	see type
OPT	CostEstimate	Total estimated cost. Use IfcCostSchedule to handle the detailed contexts of each cost item.	IfcCostSchedule	see type	see type	see type
OPT	WorkPlan	The work plan made for the work required by the work order	IfcWorkPlan	see type	see type	see type
OPT	BudgetSource	the budget source requested	IfcBudget	see type	see type	see type
	Status	the status of the work order in relation to work required	IfcWorkOrderStatusEnum	Requested	WorkDone	Requested

18.14.3. Interface Definitions

- I_WorkOrder

Copyright © International Alliance for Interoperability - 1996-1999